DOKUZ EYLÜL UNIVERSITY
GRADUATE SCHOOL OF NATURAL AND APPLIED SCIENCES

DESIGN AND IMPLEMENTATION OF A CNC ROUTER FOR MOLD PRODUCTION IN VARTM TECHNIQUE

by
Oğuzhan BOSTAN

December, 2015
İZMİR

DESIGN AND IMPLEMENTATION OF A CNC ROUTER FOR MOLD PRODUCTION IN VARTM TECHNIQUE

A Thesis Submitted to the
Graduate School of Natural and Applied Sciences of Dokuz Eylül University
In Partial Fulfillment of the Requirements for the Degree of Master of Science
in Mechatronics Engineering Department

by
Oğuzhan BOSTAN

December, 2015
İZMİR

M.SC THESIS EXAMINATION RESULT FORM

We have read the thesis entitled **"DESIGN AND IMPLEMENTATION OF A CNC ROUTER FOR MOLD PRODUCTION IN VARTM TECHNIQUE"** completed by **OĞUZHAN BOSTAN** under supervision of **ASSIST. PROF. DR.AYTAÇ GÖREN** and we certify that in our opinion it is fully adequate, in scope and in quality, as a thesis for the degree of Master of Science.

Assist. Prof. Dr. Aytaç GÖREN

Supervisor

Prof.Dr.Zeki KIRAL

(Jury Member)

Doç. Dr. Yusuf ARMAN

(Jury Member)

Prof.Dr. Ayşe OKUR

Director

Graduate School of Natural and Applied Sciences

ACKNOWLEDGEMENTS

I would like to express my sincere indebtedness and gratitude to my thesis consultant Assist. Prof. Dr. Aytaç Gören, for all his time and effort. His guidance and input at every stage of my work truly helped me navigate this endeavor. I would like to thank my parents and my wife, who have supported me all the way since the beginning of my studies.

I would also like to thank my mother Ayşe, without her continuous support and encouragement I never would have been able to achieve my goals. A special thanks to my wife Özlem. Words cannot describe how lucky I am to have her in my life and enjoy our lifelong journey with you and our guest come up to us last month. Words cannot express how grateful I am to my sister and my brother for their close attention and friendly support.

Lastly, a special thanks to my father who passed away during my thesis. You gave me the rights, encouraged me to achieve all possible difficulties may occur and showed me the way to be honest all the time. Rest in peace with eternal lights.

Oğuzhan BOSTAN

DESIGN AND IMPLEMENTATION OF A CNC ROUTER FOR MOLD PRODUCTION IN VARTM TECHNIQUE

ABSTRACT

Carbon fiber reinforced materials have higher mechanical properties although they are lighter than metal. Vacuum assisted resin transfer molding process is a cost effective closed mold process which is environmentally friendly composite material manufacturing technique. In order to produce molds quick and precise, computer aided manufacturing machines are used. Due to the fact that they are speeding up production and improving product quality CNC machines are applied widespread. Because of casting made with closed mold process angle of 2-3 degrees are used to provide mold release in VARTM process. Therefore, requirement of producing molds used in VARTM process can easily accomplished by vertical milling machine

In this study Computer aided moving gantry vertical milling machine (CNC Router) is designed. Solid model analysis is performed examining structural analysis and natural frequency analysis. Motor speeds required to machine the working space in desired time are determined. Motor power calculations are performed and motor selections completed by taking account of the inertia caused by acceleration. Applying motor parameters controller design is simulated by MATLAB/Simulink and proportional integral derivative (PID) controller designed.

Keywords: VARTM, CNC router, DC motor position control, system modelling, frequency analysis.

VAKUM DESTEKLİ REÇİNE TRANSFER ÜRETİM TEKNİĞİNE YÖNELİK KALIP ÜRETİMİ AMAÇLI CNC RUTER TASARIMI VE UYGULAMASI

ÖZ

Karbon takviyeli kompozit malzemeler dayanımları yüksek olmalarına rağmen metallere kıyasla çok hafiftirler. Kompozit malzeme üretim tekniklerinden vakum destekli reçine transfer döküm (VARTM) yöntemi, çevre dostu ve ekonomik bir kapalı kalıp yöntemidir. Bu yöntemle üretim yapılması esnasında kullanılan kalıpların hızlı ve hassas üretilebilmesi için kalıp malzemeleri bilgisayar destekli işleme tezgahlarında (CNC) hazırlanırlar. İmalatı hızlandırması ve imalat kalitesini arttırması gibi pozitif etkileriyle üretimi kolaylaştıran CNC tezgahlar bu nedenle imalat sanayisinde yaygın olarak kullanılmaktadır. İşlenecek yüzeyin geometrisine göre farklı tip işlem tezgahları vardır. VARTM yönteminde döküm kapalı kalıp yöntemiyle yapıldığı için kalıp ayırmayı sağlayabilecek 2-3 derecelik kalıp açıları kullanılmaktadır. Bu yüzden dik işlem freze tezgahları, VARTM yönteminde kullanılan kalıbın üretimi ihtiyacını rahatlıkla karşılayabilmektedir.

Bu çalışma kapsamında bilgisayar destekli köprü tipi (hareketli kızak) dik işlem freze tezgahı (CNC Ruter) tasarlanmıştır. Katı model analizleri yapılarak dayanımı incelenmiş sistem kararlılığını incelemek için doğal frekans analizi yapılmıştır. Çalışma hacmini istenen sürede işleyebilmesi için motor hızları belirlenmiştir. Motorların bu hızlara ulaşırken karşı koyması gereken ataletler göz önünde bulundurularak motor gücü hesabı yapılmış, motor seçimleri tamamlanmıştır. Seçilen motor parametreleri kullanılarak MATLAB/Simulink aracıyla benzetimi yapılmış ve oransal türevsel integral (PID) kontrolcü tasarlanmıştır.

Anahtar kelimeler: VARTM, CNC ruter, DC motor pozisyon kontrolü, sistem modelleme, frekans analizi.

CONTENTS

Page

M.Sc THESIS EXAMINATION RESULT FORM ii
ACKNOWLEDGEMENTS iii
ABSTRACT iv
ÖZ v
LIST OF FIGURES viii
LIST OF TABLES x

CHAPTER ONE-INTRODUCTION 1

CHAPTER TWO-SYSTEM 2

2.1 Composite Materials 2
2.1.1 Wet Lay-up/Hand Lay-up 2
2.1.2 Vacuum Bagging (Wet Lay-up) 3
2.1.3 Resin Transfer Moulding (RTM) 4
2.1.4 Vacuum Assisted Resin Transfer Moulding (VARTM) 4
2.1.5 Comparison 5
2.2 CNC Routers 7
2.2.1 CNC Routers 7
2.2.2 Characteristics of CNC Router 8
2.2.3 CNC Router Parts 9
2.2.3.1 Control System 9
2.2.3.2 Work Space 10
2.2.3.3 Motion and Drive System 11
2.2.3.4 Router Configuration 15

CHAPTER THREE-APPLY 20

3.1 Solid Model Design 20
3.1.1 Static Analysis 21

3.1.2 Natural Frequency Analysis 22
3.2 Driving System Design 23
3.2.1 Motor Specification 24
3.2.1.1 Motor Calculations 24
3.2.1.2 Calculations for Z Axis Motor 24
3.2.1.3 Calculations for Y Axis Motor 26
3.2.1.4 Calculation for X Axis Motor 27
3.3 Control System Design 29
3.3.1 Control 29
3.3.2 System Modelling 32
3.3.2.1 DC Motor Equation 32
3.3.2.2 Transfer Function of a DC Motor 32
3.3.2.3 Modeling of the Feed Drive with Closed-loop 33
3.3.3 System Analysis with Matlab® 35
3.3.3.1 Open-loop Response 36
3.3.3.2 Closed-loop Response 38
3.3.4 Simulink Modeling 45
3.3.5 Building the Model with Simscape 52

CHAPTER FOUR-CONCLUSION 57

REFERENCES 59

LIST OF FIGURES

Page

Figure 2.1 Hand Lay-up Process 3
Figure 2.2 Vacuum Bagging Process 3
Figure 2.3 Resin Transfer Moulding Process 4
Figure 2.4 VARTM Process 5
Figure 3.1 Solid model 20
Figure 3.2 Static analysis results 21
Figure 3.3 Natural frequency results 22
Figure 3.4 Control loops shematic 29
Figure 3.5 Classification of control mechanism according to position data detection method. 31
Figure 3.6 Block diagram of DC motor. 33
Figure 3.7 Architecture of a feed drive control system: (a) the structure block diagram of physical feed drive, and (b) the schematic diagram of the feed drive 34
Figure 3.8 The block diagram of feed drive model 35
Figure 3.9 Step response 37
Figure 3.10 Block diagram of closed-loop control 38
Figure 3.11 Step response with closed loop control 39
Figure 3.12 Step response of Z axis with feedback 41
Figure 3.13 Step response of Y axis with feedback 42
Figure 3.14 Step response of X axis with feedback 43
Figure 3.15 X axis step response with PID Tuner 44
Figure 3.16 Y axis step response with PID Tuner 44
Figure 3.17 Z xis step response with PID Tuner 45
Figure 3.18 Simulink modelling adding blocks 46
Figure 3.19 Simulink modelling adding integrator 46
Figure 3.20 Simulink modelling 47
Figure 3.21 Simulink modelling adding Gain and Add blocks 47
Figure 3.22 Adding damping and inertia Gain blocks 48
Figure 3.23 Adding in and out ports 49
Figure 3.24 Creating subsystem 50

Figure 3.25 Adding step reference input 50
Figure 3.26 X axis outputs 51
Figure 3.27 Y axis outputs 51
Figure 3.28 Z axis outputs 51
Figure 3.29 Simscape model of the system 54
Figure 3.30 Simscape model with subsystem 55
Figure 3.31 Adding source and scope blocks 55
Figure 3.32 X axis step response with Simscape modelling 56
Figure 3.33 Y axis step response with Simscape modelling 56
Figure 3.34 Z axis step response with Simscape modelling 56

LIST OF TABLES

Page

Table 3.1 Motor specification parameters under natural fequancy effect 22
Table 3.2 Servo motor comparision 23
Table 3.3 Properties of axes 24
Table 3.4 Calculated motor properties 28
Table 3.5 Motor specifications 28
Table 3.6 Selected motors parameters 36
Table 3.7 PID parameters 45

CHAPTER ONE
INTRODUCTION

In this study, by considering the composite manufacturing techniques used to produce polymer composite materials Vacuum assisted resin transfer molding (VARTM) method superiorities are described. More precise and faster to produce materials with this method.

Large companies use this technology to produce efficiently and consistently different products. Not only large companies use this technology but also even single consumers take advantage of CNC Machines. CNC Machines are used in the manufacturing sector for different implementations such as drilling, milling, reaming, boring, and counter boring. Parts can be grooved and threaded with CNC turning centers, and they have the ability to be transformed into CNC lathes, CNC drill and tap area, CNC grinding, and in conjunction with routers to make CNC wood engravers. Another engineering field which is in great demand in recent years is reverse engineering

In this study Computer aided moving gantry vertical milling machine (CNC Router) is designed. Solid model analysis is performed examining structural analysis and natural frequency analysis. Motor speeds required to machine the working space in desired time are determined. Motor power calculations are performed and motor selections completed by taking account of the inertia caused by acceleration. Applying motor parameters controller design is simulated by MATLAB/Simulink and proportional integral derivative (PID) controller designed.

CHAPTER TWO
SYSTEM

2.1 Composite Materials

Composite Materials can be best described as the materials which are constituted by fusing two or more types of materials in order to obtain and gather the best qualities of these materials or compose a new feature. The fundamental components that constituting composites are Polymers, Thermosetting or Thermoplastic resins, Reinforcement materials, the ingredients, and the Filling materials. Basically the composite materials consist of three main components: First of them called as Matrix which is a kind of polymer material constitutes the main phase. Widely used matrices are; polyester, vinyl ester, epoxy, phenolic, polyimide, polyamide and polypropylene. The second one is reinforcement that applied in the form of short or long continuous fibers and the matrix reinforcing function material as Aramid, carbon, graphite, boron, silicon carbide, alumina, glass and polyethylene (Gurit, 2015).

As an example, the textile molds are deformable and anisotropic porous materials and so the transmissivity are determined by both the direction of flow and the degree of compaction of the mold. Due to the fact that the compaction features and transmissivity in the main material direction must respectively be tested for each mold (Loos, 2001).

The final component is the additives which is the filler and other such additives on the basis of their chemical characteristics. These additives are included to develop and consolidate the characteristics of the composites (Gurit, 2015).

2.1.1 Wet Lay-up/Hand Lay-up

By taking a clean surface mold or model surface wax (release agent) is applied. Gel coat is applied to the model surface to color the inner surface of the mold and to mold surface smoothness. Released to cure. Resin impregnated by hand into fibers cut in

appropriate sizes of the model surface, by roller or brush (MEGEP, 2015). Released to cure (Figure 2.1).

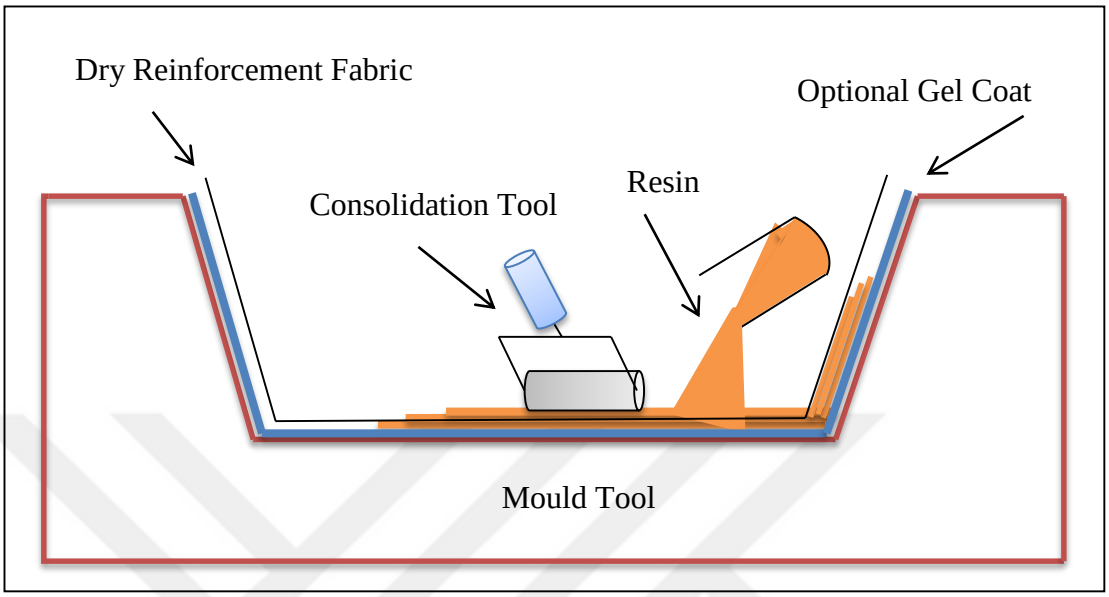

Figure 2.1 Hand Lay-up Process

2.1.2 Vacuum Bagging (Wet Lay-up)

Vacuum bagging is continuation of wet lay-up process described earlier; schematically shown in Figure 2.2.

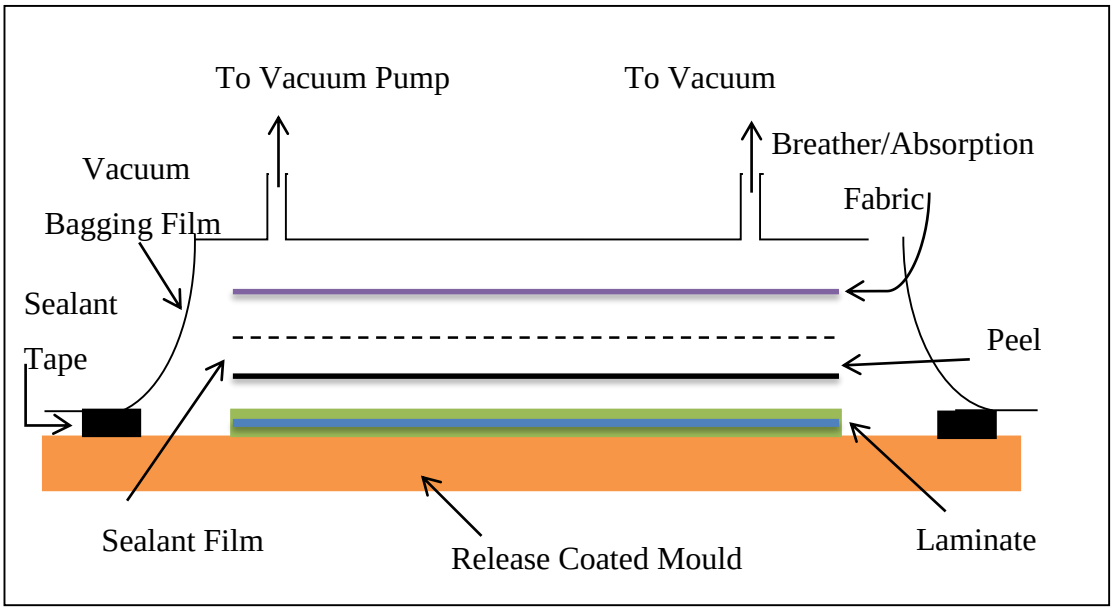

Figure 2.2 Vacuum Bagging Process

An air seal taped to the side of the mold to form a vacuum bag which prevents any air leakage that can occur at the edges of the bonding surface. Discharge hose from the vacuum bag connected (Gurit, 2015). The vacuum pump extracts the air with a vacuum hose and the resin is absorbed.

2.1.3 Resin Transfer Molding (RTM)

Described earlier mold prepare but this time not impregnated the fabric. Fabrics laid-up dry. A second mold tool is then clamped over the first, and resin is injected in (MEGEP, 2015). Released to cure (Figure 2.3).

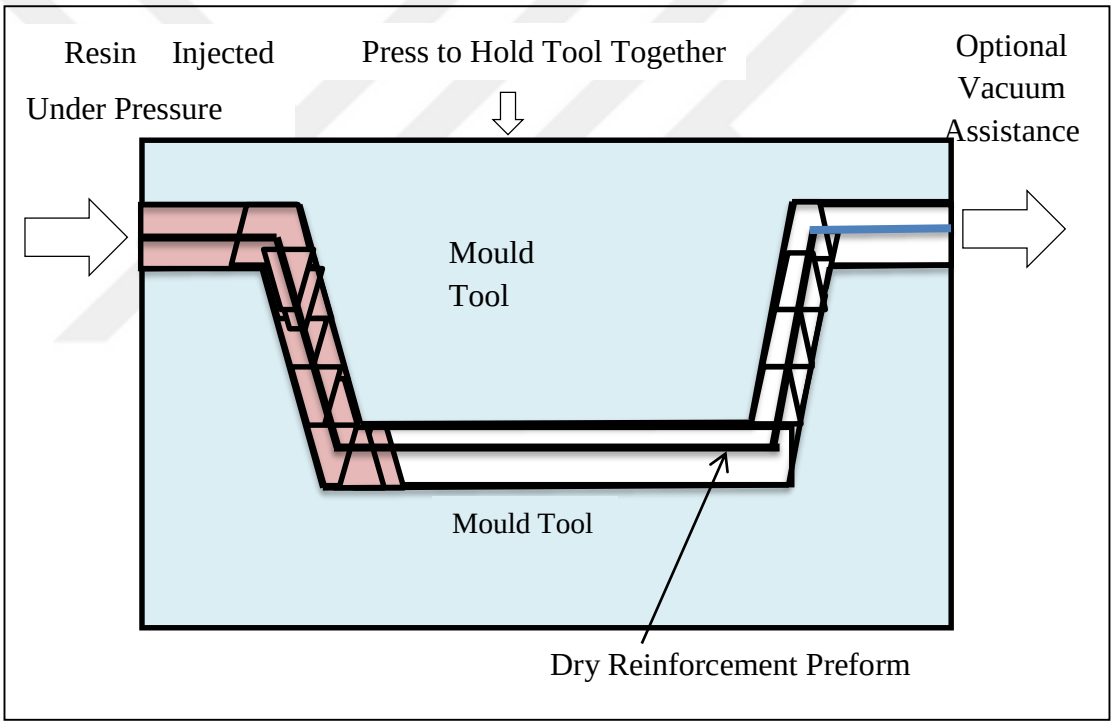

Figure 2.3 Resin Transfer Molding Process

2.1.4 Vacuum Assisted Resin Transfer Molding (VARTM)

Fabrics are laid-up as a dry stack of materials as in RTM. Fibers sealed with peel ply lay-up resin distribution fabric to provide resin flow. The whole dry stack is then vacuum bagged, and once bag leaks have been eliminated. Thanks to vacuum liquid resin with hardener is allowed to flow into the laminate from an external resin tank.

The resin distribution over the whole laminate is aided by resin flowing easily through the non-structural fabric, and wetting the fabric out from above (Goren, & Atas, 2008). Curing and de-molding steps follow the impregnation to finish the product (Figure 2.4).

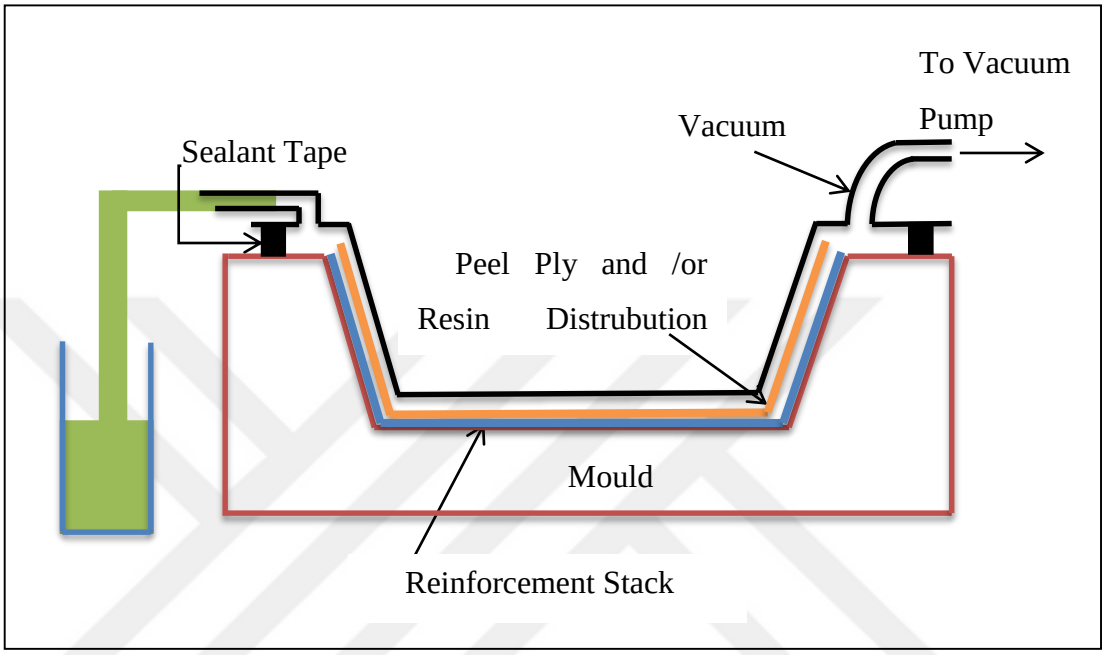

Figure 2.4 VARTM Process

2.1.5 Comparison

For fabricating affordable polymeric composite structures, RTM and VARTM methods are seen to have very potential for this purpose. It is already tested that these two methods offer "higher fiber volume fraction, better surface quality and microstructural control as compared to traditional techniques such as spray up and hand layup processes." They have, of course, some advantages and disadvantages to apply in fabric molds (Tanoğlu, & Seyhan, 2003).

The RTM, for the beginning, is one of the cost-effective fabrication methods for the manufacture of polymer composites. As shown in Figure 2.3, the RTM process provides some advantages compared to other composite fabrication techniques namely autoclave and compression molding of prepreg tape laminates. Initially, "high fiber volume fraction composites can be fabricated with low void contents". Secondly, it

can be used to mold that many parts consisting of different complex shapes by using a single preform to incorporate all in one time and thus the structure becomes lighter and cheaper. Thirdly, it "eliminates the hand lay-up of prepreg tape." Hence, it reduces the cost of operation and increases the rate of production. As a negative side of RTM process, we should keep in mind that "RTM procedure is expensive, and the tooling design becomes difficult when fabricating large and complex shaped parts." For this, VARTM has been designed to eliminate the deficiencies of classical RTM process (Xiaolan, 2003)

VARTM is, on the other hand, a widespread manufacturing process used in polymer-matrix composite structures both in civil and military fields. This process has been improved for last two decades, and it is necessary to mention on its advantages over the traditional RTM process; it namely decreases the cost of tooling technology, "reduces volatiles emission and allows the use of lower resin injection pressures" (Xiaolan, 2003).

Without prepregs and autoclaves, this process is an ideal method to lower costs used in the aeronautical field by comparison with the conventional composite fabrication techniques Since it has lower tooling costs, potential elements for room temperature processing, and good scalability for larger structures VARTM has many advantages than RTM (Heider, & Gillespie, Jr., 2008).

In other words, classical manual process has some limitation and disadvantages in molding process, for example, it requires more labor and it is hard to control the quality of final product since it mainly depends on the expertise of operator. At this point, the VARTM process easily eliminates these deficiencies by reducing lay-up times providing more consistent and reproducible process as well as minimizing the effect of operator's intervention (Chittajallu, 2004).

Carbon fiber reinforced plastics (CFRPs), for a long time, have been widely used in vital areas such as aerospace, automotive and transportation applications. CFRP structures are significantly useful and demanded for reducing of manufacturing cost,

manufacturing lead time, and development period. It is important to emphasize that we need to develop high value-added and affordable techniques which make us to produce more qualitative and reliable CFRP composites. As an example, the aerospace industry largely applies CFRP prepregs in autoclave process in order to guarantee the high quality and reliable properties CFRP structures. For a few decades, it is known that experts have been working on Out-of- Autoclave (OoA) process to develop low-cost manufacturing processes. RTM and VARTM is one of the agents of low-cost processes of CFRP structures, placing dry fabric preforms on the mold followed by the resin impregnation that uses the pressure difference. Using these methods, it is possible to integrally produce the complex structures with little components by applying affordable molds and facilities. Moreover, RTM or VARTM is comfortably appropriate for structures in many areas (Yokozeki et al., 2013).

2.2 CNC Routers

2.2.1 CNC Routers

Computer numerical control (CNC) is a type of manufacturing machined parts process. The control and allocation is produced by a computerized controller. Motors are used to drive machine tool axes by controller and control of the direction and speed are applied to each motor. The operator loads the programmed path into the computer controlled machine. Interchangeably with CNC, Numerical control (NC) is still often used because of that it was the original term given to this technology. CNC milling machine in concept, which is very similar to CNC Router, was routing by hand but in CNC Router tool paths are controlled by computer numerical control. Therefore they can reduce waste of time and material and minimize the frequency of errors. With many advantages, automation and precision can be said as the key benefits. Also the product consistent, high-quality work and factory productivity are some other benefits of CNC router (Albert, 2011).

2.2.2 Characteristics of CNC Router

Automation is the most important benefit offered by all forms of CNC technology. Adequate operator ability to produce the work can be reduced and operator can be free to do other tasks during CNC machine running entire machining cycle unattended. In this case CNC user can reduce operator fatigue, fewer mistakes caused by human error and consistent and predictable machining time for each work piece.

The second major benefit of CNC technology is consistent and accurate work pieces in other words *precision*. Today's CNC machines feature a typical accuracy rate in the range of 0.05 to 0.10 mm and repeatability near or better 0.02 mm. This means that once a program is verified, two, ten, or one thousand identical work pieces can be easily produced with the same precision and consistency.

Third benefit offered by most forms of CNC machine tools is *flexibility*. Since these machines are run from computer programs, running a different work piece is as easy as loading a different program. This leads to yet another benefit, quick changeover. Since these machines are very easy to set up and run, and given the ease with which programs can be loaded, they allow for a very short set up time. This is critical with today's Just-In-Time production environments. The resulting reduction in the number of machines needed in a wood manufacturing shop is yet another benefit worthy of noting.

Accuracy is a simple machine characteristic to measure although simply comparing cut length with programmed length alone is not a good evaluation of accuracy. Absolute positioning accuracy means the ability to reach a point in space within a certain tolerance. This measure can change greatly whether it is measured on a single or on multiple axes, or on whether or not there is a load applied to the cutter head. This measurement is also dependent on the position of the piece on the work table. Different numbers can be obtained in different areas as ball screw compensation tables can be off or missing altogether.

Spatial *accuracy* is mostly dependent on encoder resolution. A high quality, properly adjusted servo system can normally position within plus or minus ten times the encoder resolution. Therefore, a system with 0.0005" resolution can only be expected to achieve plus or minus 0.005" or 0.1 mm positioning accuracy.

Repeatability is the ability to return to a point in space each time a program is executed. Just like absolute accuracy, repeatability can either be measured on a single axis or on multiple axes. On most systems, repeatability always outshines absolute positioning accuracy.

Predictability is important in the business of cutting parts using computer controlled equipment. You want the control portion of the machine to work the same way every time no matter what program is running.

A good controller will calculate the tool path many steps ahead and alert you or decide on a different course of action when it finds problems. In the early days of Point-to-Point machines, the computer told the head to move to a certain position in X-Y. The drives executed this operation without consideration for the path that the tool would take. On newer CNC machines, the movements of the axes are coordinated with each other to obey a set of given rules. This gives them the ability to circle around fixtures and to ease the cutter in and out of a part for example. This is known as an interpolated path.

2.2.3 CNC Router Parts

2.2.3.1 Control System

The controller is the brain of the CNC machine. The term controller usually refers not only to the computer but also to all the electronic and electrical devices that give motion to the machine. There are two types of controllers available on machines today. Proprietary controllers and open-architecture, personal computer (PC) based controllers. Some manufacturers claim that the required safety and reliability of CNC

machines can be assured only through proven but proprietary controller technology. On the other hand the high speed processors of today's PCs allow more complex motion calculations in real time, resulting in smoother machine motions and faster speeds. The individual features of each system have to be compared and weighed against the desired outcome on a case-by-case basis.

2.2.3.2 Work Space

Many types of tables are available today and these vary depending on the type of work being done and the work holding methods that are being used.

Flat tables is the most basic table offered with a CNC router. It consists of a flat surface made of laminate, aluminum or MDF. To hold down parts onto these tables, glue, double sided tape, clamps or vacuum pods connected to a small rotary vane pump are used. These types of tables are usually associated with entry level machines.

T-slot tables are a by-product of the metal working industry. The only difference is that for the wood working machine, they are usually made of aluminum extrusion. These tables permit the use of inexpensive bolt-on clamps to hold down parts. They are mostly found in the sign making industry and on economical tables.

Pod and Rail is considered by many to be the staple for the point-to-point machine (P2P). Although very few true P2P machines still exist, these tables are good for machining single flat parts where access to the edge is important. Even if no spoil boar is necessary, they can be time consuming to adjust between operations. Vertical accuracy is poor and replacing parts if the tool strikes the pod is usually expensive. There are many variants of the pod and rail system. On some machines, the pods and rails are controlled by the program and move themselves to the setup location. Another variation uses pneumatic clamps instead of vacuum pods. This type of work-holding approach is being used more in specialized fields like the window frame and door industries.

Matrix tables are a variation on the themes of pods and universal vacuum tables. A matrix of grooves is machined into the surface of a phenolic or aluminum table. Port holes are then distributed evenly across the surface of the table. A gasketing material can be inserted into the grooves and port holes opened for holding individual parts or for the use of a spoil board. Special vacuum cups that fit into the matrix can also be used to hold small parts and simulate a pod and rail system.

2.2.3.3 Motion and Drive System

Motion is defined as a continuous change in the position of a body (the cutting tool) relative to a reference point (the part), as measured by an observer (the operator) in a particular frame of reference. A frame of reference is the perspective from which space is observed. Specifically, in physics, it refers to a provided set of axes from which an observer can measure the position and motion of all points in a system, as well as the orientation of objects in it. This is important for the CNC machine because every movement it makes has to be measured and calculated.

2.2.3.3.1 Structure. In CNC systems, a machine coordinate system, a workpiece coordinate system, and local coordinate systems are defined for convenience when editing a part program and handling machine tools.

A machine coordinate system is defined by setting a particular point of the machine tool as the origin of a coordinate system. A workpiece coordinate system is defined by setting a particular point on the workpiece as the origin so as to make editing a part program easier. That is, when editing a part program using one particular workpiece coordinate system, we can edit the part program by defining another coordinate system based on the workpiece coordinate system. We call this secondary coordinate system a “local coordinate system”. A workpiece coordinate system is set by commanding particular G-codes (G54 to G59) and a local coordinate system is defined by setting an offset (IP) that denotes the displacement of the local coordinate system from the origin of the workpiece coordinate system (Suh et al., 2008).

The cartesian coordinate system also known as the rectangular coordinate system it is used to define each point in space through three numbers, usually called the x, the y and the z coordinate of the point.

There are two kinds of motion, linear and rotational. *Linear movements* are produced by the different axes moving along their rails. Diagonal lines, and arcs and circles, are the result of two or more axes moving at the same time in a synchronized manner. *Rotational movements* are the result of the part or the head rotating around an axis.

3-axis machines move in a Cartesian manner along x, y and z. A fourth axis often takes the form of a rotating device for the part being cut, similar to a lathe or an indexing head along the spindle that permits the controlled rotation of an aggregate tool. *5-axis machines* have a much greater range of motion and can move in a manner similar to the human hand. These machines often have a deep z stroke to be able to work in a large three dimensional area. There are 6 possible axes of motion, 3 linear and 3 rotational, one of which is considered to be the cutter spinning in the spindle. The CNC machine must calculate the direction, speed and acceleration on each of the axes in order to cause the proper movement to be made. This is done with the help of complex mathematical formulas called algorithms.

Rapid motion refers to a motion that the machine makes when travelling only and not cutting. This is used when going from one point to another away from the material being cut. There is no need to limit the speed because it won't affect the quality of the cut. Vendors often erroneously refer to this as being the top speed of the machine. The theoretical top speed of cut will be set by the cutter used and the material being cut, as well as by the length of the cut, more so than by the speed of the machine unless quality and precision of cut are not important. When making a short cut, the cutter almost never has enough time to accelerate to its top speed before having to decelerate ahead of coming to a full stop.

Absolute motion and incremental motion are the terms used to describe the point of reference used by the machine to follow a specific path. Absolute motion is measured from the base reference point specified earlier in the program. This may or may not be the zero of the machine. Incremental motion, on the other hand, is measured using the last known point as the reference. In other words, measurements are made from the previous instructions. Care must be taken when working in incremental mode not to skip over any point because every subsequent measurement will be affected.

2.2.3.3.2 Actuators. The drives are the devices that cause the machine to move. Three different drive motors have been used to power CNC routers:

- Stepping motors,
- DC servo drives and
- AC servo drives.

A *stepper motor* does what the name suggests – it takes steps and keeps track of these steps to always know where it is on the machine. Stepper motors work in an open loop setting where they don't receive feedback when the work is done. This can negatively impact the accuracy of the parts. It's also difficult to find stepper motors that offer both high speeds and torque. One typically has to be selected in favor of the other.

A *servo motor* works in a closed loop and is paired with an encoder which provides an amplified feedback to the motor thus constantly correcting its position on the machine. While more precise, more powerful and less noisy than stepper motors, servo motors are more expensive.

A *stepper motor* uses a permanent magnet rotor and wire wound stator. The stator is wound so that the motor has a large number of poles, typically 200.

These poles are generally arranged in groups of four. When one pole is energized, the rotor will align with that pole and lock in place. The force that it exerts holding that position is essentially the amount of torque available from the motor.

When an adjacent pole is energized and the current pole turned off, the rotor "steps" over to the new position. This stepping motion between poles is the origin of the name.

An axis controlled by a stepper motor is positioned by feeding the proper number of steps to the stepper motor drive. The motor then steps to the correct position. This is known as an open loop system. Acceleration and deceleration in a stepper motor system must be limited to make certain that the holding torque of the motor is never exceeded. A safety factor must be given to factor in the weight of the material being machined as it can affect the momentum of the motion.

Another method of controlling stepper motors is called microstepping. Instead of simply energizing each pole one at a time, the microstepper systematically balances forces between two adjacent poles to carefully rotate the field and thus the rotor. This system works well to eliminate oscillation but because for much of the time the rotor is being acted.

When the expenditure of DC and AC Servo motors diminished, stepping motors lose its importance. A *DC servo motor* is regulated with a permanent magnet stator and these permanent magnets are added to the outside of the motor. On the other hand, encoder, in other words a position feedback sensor, is also attached to the rotor. Encoder is useful for keeping track of the cycle of the servo motor while reference point is achieved.

Depending on the instruction, which the control gives in order to move the motor, the position, where the motor is already situated and should be situated is known by it. If there is a distinction between these two positions, it is termed as an error signal. When this error signal turns to be smaller, the voltage that fed to drive becomes smaller as well and the motion of the motor starts to slow by the time error signal is finished and the drive is stopped. In contrast with the stepper motor, one of the most important advantages of the DC Servo motor systems is that it has no problem of losing steps. But DC Servo motors have some problems inside. One of them is an error signal that

had to be present for system to work. In other words, the machine always falls behind the current situation and it is commonly named a "lag error"(Suh et al., 2008).

Differently from DC Servo motors, *AC Servo motors* are nowadays popular to solve these errors. Due to the fact that the rotor is not included any wires, commutation is electronically occurred by the servo drive. This is considerably higher than the power which is able to be fed by rotating brushes. Also, an AC Servo motor provides more power and can produce bursts of power higher than normal. Besides, higher end AC Servo motors use uncommon earth magnets and it has great impact on the higher acceleration/deceleration productivity (Suh et al., 2008).

Essentially there are two different types of *spindles* in use today, the belt driven, stand-alone spindle and the high frequency motor spindle.

The earliest spindles used for routing were belt driven spindles. They were primarily used on fixed routers, such as pin routers. To obtain high router speeds, the synchronous electric drive motor was equipped with a large diameter pulley and the spindle shaft was equipped with a smaller diameter pulley.

2.2.3.4 Router Configuration

2.2.3.4.1 Software. Software is at the heart of any NC machine. Even the most advanced piece of machinery cannot perform to its full potential without the proper software to make it happen. It is also the area that will require the highest skill set on the path toward CNC success.

There are many levels of software needed to run a CNC router: from the technical drawings to the sales requirements and scheduling, to the actual NC code that makes the axes move. All have a specific role to play in the overall solution.

A new concept is evolving in automated manufacturing circles. It is called “Human Machine Interface” or HMI. This is the means by which the operator (the user) interacts with a particular machine (the system).

This concept aims to improve the interactions of the operator with the machine. An example of this is when the operator can visualize the machining operation on the screen and they can change or adjust cutting parameters on the fly in the middle of the operation.

Great progress has been seen in the past decade, and even greater advances can be expected in the years to come. Software and CNC technology are proving to be a fundamental tool in the continued survival of the North American wood products industry.

The acronym for *Computer Aided Design (CAD)* originally meant Computer Aided Drafting because of its use as a replacement for traditional drafting.

CAD is used to design, develop and optimize products which include goods used by end consumers or intermediate goods used in other products.

CAD enables designers to lay out and develop work on screen, print it and save it for future editing, saving time on their drawings. Many different CAD software packages exist, some drawing in 2D, some in 3D, some cater to architects, some to engineers and some are made for the layman. Some are very complex and require a long learning curve, while others are unsophisticated and very intuitive to use. Still others are made with specific products in mind such as kitchen cabinets or doors and windows. Care must be taken in choosing CAD software so that it corresponds well to needs. It’s very easy to waste a lot of time on unnecessary functions in day to day operations. An example of this is if parts are drawn in 3D when only shop drawings are needed.

Computer Aided Manufacturing (CAM) takes the CAD drawings and helps translate them into manufactured parts by adding tool sequences, machining parameters, cutting speeds, etc. CAM refers to a wide range of computer-based software tools that assist engineers, tool and die makers and CNC machinists in the manufacture or prototyping of product components.

Traditionally, CAM has been exclusively considered as an NC programming tool. Although this is most often the case, CAM functions have expanded to integrate more fully with different engineering functions. The days of programming parts in cryptic G-code on a small monochromatic display at the control are long gone and today's CAM software can offer much ore versatility and efficiency.

Parametric design software has often been associated with very specialized industries but it is becoming more and more widespread.

This software is often associated with a dedicated machine and will not work for producing out of the ordinary parts, however they are most often very productive and outperform some of the more universal programs.

G-Code is the language that the CNC understands in order to move its axes and perform operations. Also known as RS -274D, it is the standard for numerically controlled machines and was developed by the Electronic Industry Association in the early 1960's.

G-Code was developed and first used with the original punched paper tape. The basic unit of the program is called a 'block', which is seen in printed form as a 'line' of text. Each block can contain one or more 'words', which consist of a letter, describing a setting to be made, or a function to be performed, followed by a numeric field, supplying a value to that function. Various words can be combined to specify multi-axis moves, or perform special functions. Descriptors preceded by the percent sign (%) or bound by parentheses are text or comments that are ignored by the machine. Their sole purpose is to add comments and clarity to the code (Albert, 2011).

2.2.3.4.2 Configuration. This is a machine style that is seldom used anymore. They can usually be found on smaller machines or in special applications such as for chair legs or for making templates. In this configuration, a table that moves both right to left and front to back is mounted under a spindle that moves up and down. The first of these machines was actually a pin router with an X-Y table mounted to it.

It is quite easy to get a very rigid machine in this manner. However, from a practical standpoint it is limited to rather small table sizes. The spindle must be attached to the machine base by an upright column. The distance from the column to the spindle defines the maximum table width and this distance cannot be too large without making the overall machine structure impractical.

Cantilevered tables are usually referred to in the industry as point-to-point machines although only very old machines actually qualify as such anymore. This configuration has one major advantage. It is easy to load and unload. The table is suspended in front of the operator and all of the operating mechanism is located behind the table. Every part of the table can be easily reached. Since the arm structure is suspended from only one side, developing a structure that remains rigid becomes quite difficult.

Moving table and the moving gantry designs are the most common in industry today. The moving table machine is more popular than the moving gantry machine, not because it is inherently more stable but because of a control system limitation. A moving table machine has a single lead screw moving the head back and forth on the gantry and a single screw moving the table front to back.

A *moving gantry* machine has the gantry mounted to a rail located on either side of the table. One lead screw moves the head back and forth on the gantry, but two lead screws are required to move the gantry. As a result, the moving gantry machine requires one extra servo motor and drive making it more expensive. Each screw must also have its own independent compensation table which makes it more demanding on the controller.

The biggest practical difference between the moving gantry and the moving table construction is that for equal table size, the moving gantry design requires about half the floor space. A moving gantry machine can generally carry heavier parts than a moving table machine.

This is mostly true when working with stone or metals. When the fixture and work piece weighs thousands of pounds, this can become a problem. In these circumstances it is better to place the fixture and work piece on a fixed table braced to the floor and move the gantry over the work (Albert, 2011).

CHAPTER THREE
APPLY

3.1 Solid Model Design

Described earlier a bridge type moving gantry is best for big sizes and forward dynamics analysis can be applied easily. At the beginning decided work space is 1800mm*1200mm*600mm.Solid model shown in Figure 3.1 created.

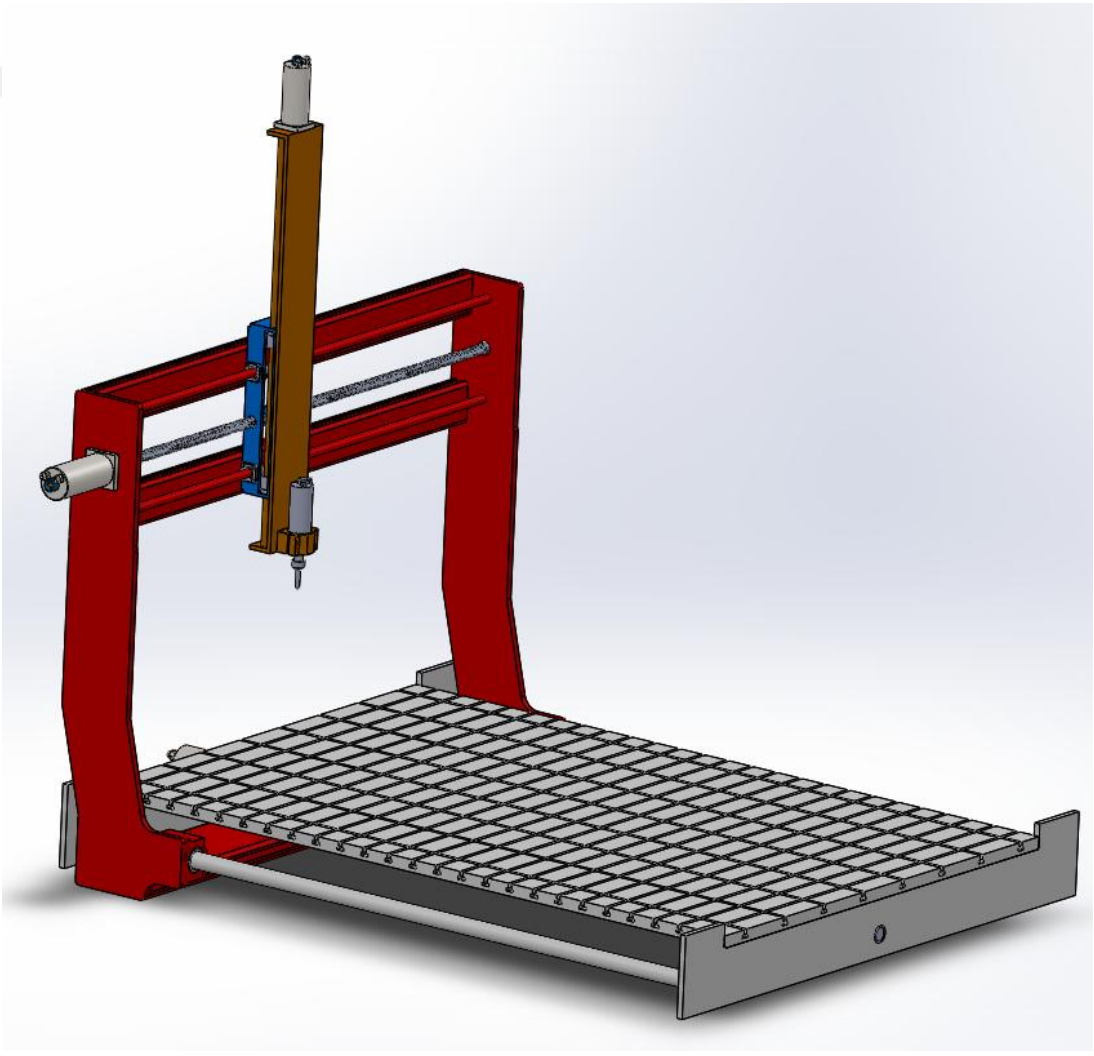

Figure 3.1 Solid model

3.1.1 Static Analysis

All parts designed, created and statically tested under expected static loads with SolidWorks®. From the analysis results shown in Figure 3.2, obtained minimum safety factor is 6.8.

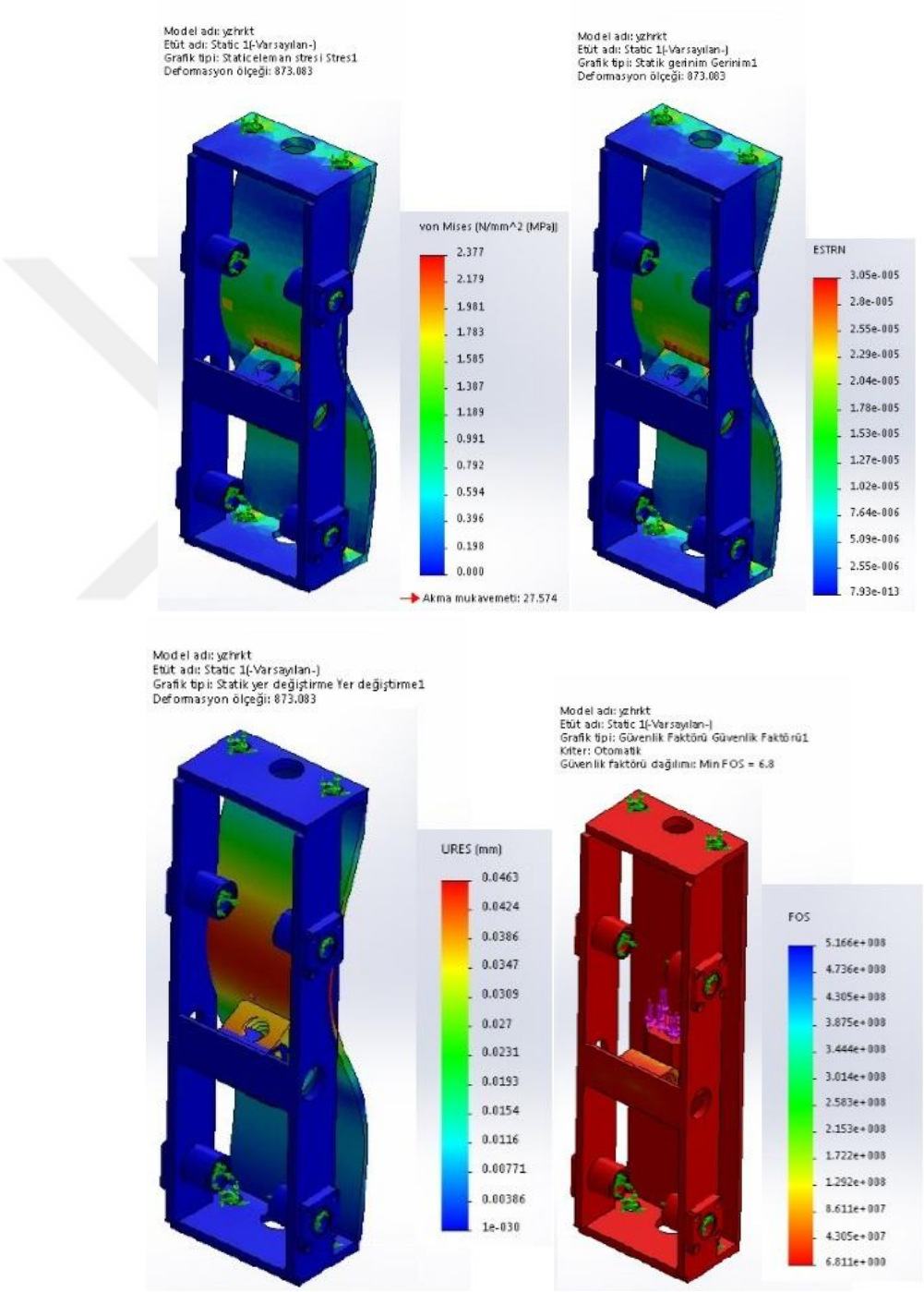

Figure 3.2 Static analysis results

3.1.2 Natural Frequency Analysis

Resonance in general is a phenomenon that increasing the amplitude of an oscillating system. Motor mill axes natural frequencies needed to check motor critical speed. Natural frequency analysis under Solidworks® simulation toolbox used. In Figure 3.3 first four natural frequency modes shown.

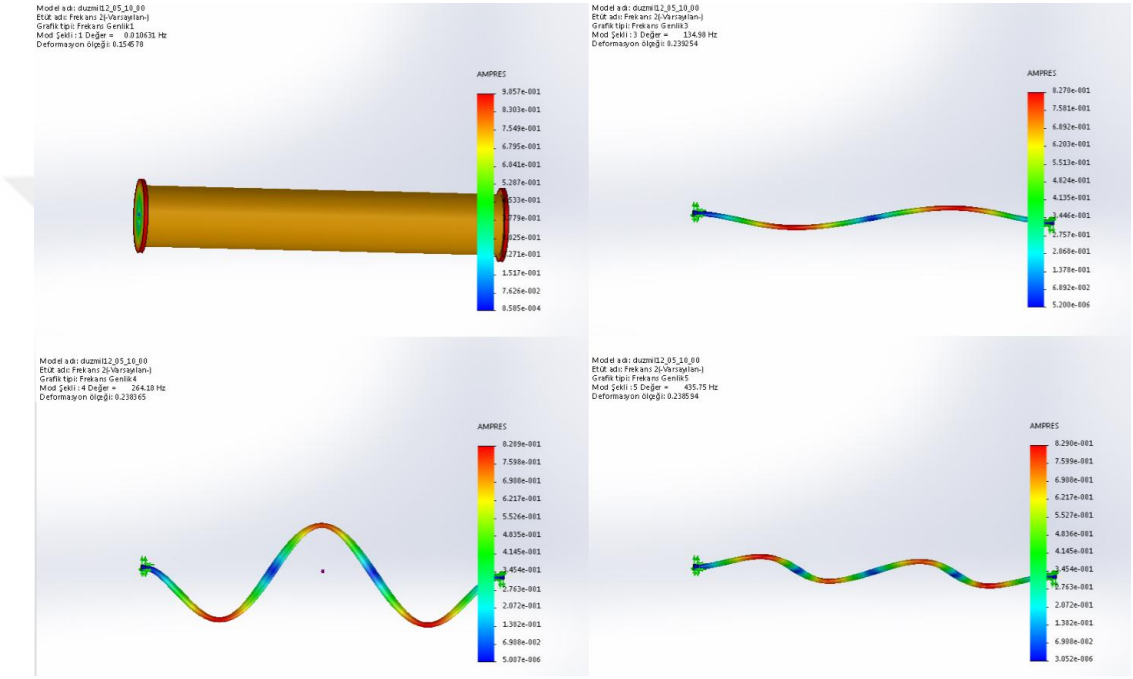

Figure 3.3 Natural frequency results

In Table 3.1 three axes first and second natural frequencies listed. Motor speeds to avoid named critical motor speed and eligible motor speeds choosed as 2000 rpm.

Table 3.1 Motor specification parameters under natural frequency effect

Axes	**X**	**Y**	**Z**
Diameter	32 mm	24 mm	24 mm
Lenght	1800 mm	1200 mm	600 mm
1.Natural Frequency	46.6 Hz	79.2 Hz	58.9 Hz
2.Natural Frequency	128 Hz	218 Hz	162 Hz
Minimum critical speed	2796 rpm	4752 rpm	3534 rpm
Maximum motor speed	2000 rpm	2000 rpm	2000 rpm

3.2 Driving System Design

DC servo motor,

The stator comprises a cylindrical frame and the magnet. The rotor is also consisting of a shaft and brush. A commuter is added to the outer side of the shaft and at the end of the shaft there is a detector, which is built into the rotor, for detecting alternation speed.

A controller that stated in the DC Servo motor is able to be designed in that the torque is straightly proportional to the amount of current. The speed series of DC Servo motors is very large and the cost is very low (Suh et al., 2008).

The strengths, weaknesses and characteristics of the servo motors mentioned above are summarized in Table 3.2.

Table 3.2 Servo motor comparison (Suh et al., 2008)

	DC Servo Motor	Synchronous Type AC Servo Motor	Induction Type AC Servo Motor
Strengths	Low price Broad velocity range Easy control	Brushless Easy stop	Simple structure No detector needed
Weaknesses	Heat Brush wear Noise Position-detection needed	Complex structure Torque ripple Vibration Position-detection needed	Dynamic braking impossible Loss of heating
Capacity	Small	Small or medium	Medium or large
Sensor	Unnecessary	Encoder, resolver	Unnecessary
Life length	Depends on Brush life	Depend on bearings life	Depend on bearing life
High speed	Inadequate	Applicable	Optimized

3.2.1 Motor Specification

3.2.1.1 Motor Calculations

In this section, required motor torque and power calculated. Weight and moment of inertia exported from SolidWorks shown in Table 3.3

Table 3.3 Properties of axes

Axes	X	Y	Z
Mass of linkages	132.4 kg	26.2kg	16.1 kg
Moment of inertia of screw	1048.5 kgmm^2	246.18 kgmm^2	174.04 kgmm^2
Lead	18 mm	12 mm	6 mm
Length	1800 mm	1200 mm	600 mm
Time	3 s	3 s	3 s

3.2.1.2 Calculations for Z Axis Motor

Total mass equal to;

$$m_{tz} = m_{spindle} + m_{cutting\ tool} + m_{linkages} \tag{3.1}$$

$$m_{tz} = 20kg$$

Exported SolidWorks inertial moment of the screw is equal to;

$$J_{screw_z} = 174kgmm^2$$

Total length of z axis can be driven in 3 seconds which means;

$$v_z = \frac{x_z}{t_z} = \frac{600}{3} = 200\frac{mm}{s} \tag{3.2}$$

with a lead

$$\ell_z = 6mm$$

Feed speed equals to;

$$v_z = \left(\frac{\ell_z \, n_z}{60}\right) \tag{3.3}$$

Rearranging equation 3.3 requiring rotational speed of motor calculated as

$$n_z = 2000\ rpm$$

From the equation of the kinetic energy, equivalent moment of inertia can be derived as;

$$Ek_z = \frac{1}{2} m_z v_z^2 = \frac{1}{2} J_{eqz}\, {w_z}^2 \tag{3.4}$$

$$J_{eqz} = m_z \left(\frac{v_z}{w_z}\right)^2 \tag{3.5}$$

The angular velocity can be rearranged as follows;

$$w_z = \frac{2\pi n_z}{60} \tag{3.6}$$

then equivalent moment of inertia calculated as;

$$J_{eqz} = m_z \left(\frac{\ell_z n_z}{2\pi n_z}\right)^2 = m_z \left(\frac{\ell_z}{2\pi}\right)^2 = 18.24 kgmm^2 \tag{3.7}$$

Total inertial moment is sum of equivalent moment of inertia and moment of inertia of screw z.

$$J_z = J_{eqz} + J_{screw_z} = 12.66 + 176 = 186.7 kgmm^2$$

The acceleration power can be calculated by taking time to accelerate $2000\ rpm$ as $t_{a_z} = 0{,}1\ s.$;

$$P_{acc_z} = {w_z}^2 \frac{J_z}{t_{a_z}} = \left(\frac{2\pi n_z}{60}\right)^2 \left(\frac{J_z}{t_{a_z}}\right) = 81.9W \tag{3.8}$$

Because of little cutting forces; power of milling is much smaller than acceleration power.

$$P_{mill_z} \ll P_{acc_z} \tag{3.9}$$

The torque required is

$$P_z = T_z . w_z = T_z . \frac{2\pi n_z}{60} \quad => T_z = \frac{P.60}{2\pi n_z} = 0.391 Nm \tag{3.10}$$

Motor properties calculated as $0.391Nm$, $81.9W$, $2000rpm$ with a time of acceleration $t_{a_z} = 0.1\ sec$, lead $\ell_z = 6mm$ velocity $v_z = 200\ mm/s$.

3.2.1.3 Calculations for Y Axis Motor

Total mass found by applying equation 3.11 is equal to;

$$m_{t_y} = m_{spindle} + m_{cutting\ tool} + m_{link} + m_{motorz} = 30\ kg \tag{3.11}$$

calculated as

$$m_{link} = 26.2\ kg$$

Exported from SolidWorks, inertial moment of the screw is equal to;

$$J_{screw_y} = 246.2\ kgmm^2$$

From equation 3.4 it can be derived equivalent moment of inertia at y axis motor mill;

$$J_{eq_y} = m_{t_y}\left(\frac{\ell_y}{2\pi}\right)^2 = 109.43\ kgmm^2 \tag{3.12}$$

From equation 3.13 total moment of inertia at motor mill obtained as;

$$J_y = J_{eq_y} + J_{screw_y} = 355.63\ kgmm^2 \tag{3.13}$$

Rotational speed of motor found from equation 3.6 as;

$$n_y = 2000\ rpm$$

Required power can be obtained by rearranging Equation 3.8 as;

$$P_{acc_y} = {w_y}^2.\frac{J_y}{t_{a_y}} = \left(\frac{2\pi n_y}{60}\right)^2\left(\frac{J_y}{t_{a_y}}\right) = 156\ W \tag{3.14}$$

Because of little cutting forces and machining vertical; power of milling is much smaller than acceleration power.

$$P_{acc_y} \gg P_{milly}$$

Power of motor is proportional to rotor speed and torque

$$P_y = T_y w_y = T_y \frac{2\pi n_y}{60} \tag{3.15}$$

With a lead $\ell_y = 12mm$ required torque can be obtained as;

$$T_y = \frac{60P_y}{2\pi n_y} = 0.745Nm \tag{3.16}$$

Motor properties calculated as $0.745Nm$,$156\ W$, $2000\ rpm$ with a time of acceleration $t_{a_y} = 0.1\ sec$, lead $\ell_y = 12mm$ velocity $v_z = 400\ mm/s$.

3.2.1.4 Calculation for X Axis Motor

Total mass found by applying equation 3.11 is equal to $m_{t_x} = 165\ kg$.

Exported from SolidWorks, inertial moment of the screw is equal to;

$$J_{screw_x} = 1048.5\ kgmm^2$$

From equation 3.4 it can be derived equivalent moment of inertia at x axis motor mill;

$$J_{eq_x} = m_{t_x}\left(\frac{\ell_x}{2\pi}\right)^2 = 1354.2\ kgmm^2 \tag{3.17}$$

From equation 3.18 total moment of inertia at motor mill (J_x) obtained as;

$$J_x = J_{eq_x} + J_{screw_x} = 2402.7\ \ kgmm^2 \tag{3.18}$$

Rotational speed of motor (n_x) found from equation 3.6 as;

$$n_x = 2000\ rpm$$

Required power to accelerate (P_{acc_x}) can be obtained by rearranging Equation 3.8 as;

$$P_{acc_x} = {w_x}^2.\frac{J_x}{t_{a_x}} = \left(\frac{2\pi n_x}{60}\right)^2\left(\frac{J_x}{t_{a_x}}\right) = 1054W \tag{3.19}$$

Because of little cutting forces and machining vertical; power of milling is much smaller than acceleration power.

$$P_{acc_x} \gg P_{milly}$$

Power of motor (P_x) is proportional to rotor speed ($n_x = 2000\ rpm$) and torque as;

$$P_x = T_x w_x = T_x\frac{2\pi n_x}{60} \tag{3.20}$$

With a lead $\ell_x = 10mm$ required torque (T_x) can be obtained as;

$$T_x = \frac{60P_x}{2\pi n_x} = 5.032\ Nm \tag{3. 21}$$

Motor properties calculated as $5.032\ Nm$, $1.054kW$, $2000\ rpm$ with a time of acceleration $t_{a_z} = 0.1\ sec$, lead $\ell_z = 18mm$ velocity $v_z = 600\ mm/s$. All these results are summarized in Table 3.4.

Table 3.4 Calculated motor properties

Motor Axis	Z	Y	X
Power (W)	81.9	156	1054
Torque (N.m)	0.391	0.745	5.032
Speed (rpm)	2000	2000	2000
Lead (ℓ) (mm)	6	12	18

In accordance with this results; choosing motor with a safety factor as approximately 1.5-2 the motor properties listed in Table 3.5.

Table 3.5 Motor specifications

Motor Axis	Z	Y	X
Motor Model	MT-3353B	MT-3363B	MT-4545C
Rated Power (W)	268	476	2355
Rated Voltage (V)	100	100	150
Rated Current (A)	2.68	4.76	15.7
Rated Speed (rpm)	2800	2800	3300
Holding Torque (Nm)	0.71	1.27	5.65
Peak Torque (Nm)	4.94	8.5	28.2
Viscous Damping (Nm/krpm)	0.0042	0.0078	0.409
Torque Coefficient (N.m/A)	0.293	0.297	0.401
Rotor Inertia (Kg.mm^2)	184	367	2712
Phase Resistance (Ω)	5.6	2.4	0.56
Phase Inductance (mH)	15.5	6.1	1.8
Weight (Kg)	3.6	5	10.4

3.3 Control System Design

3.3.1 Control

The instantaneous velocity and position information obtained from the sensor sent to control circuit. This information is controlled to minimize speed and position error in the servo motor. For every axis of the machine tool, the feedback control system made of three independent control loops (Figure 3.4). Position control loop is located in the NC in general. Velocity control loop and current control loop are located in a servo driving device. Control loops can be replaced optionally depending on the objective of the designer. There is no absolute standard (Suh et al., 2008).

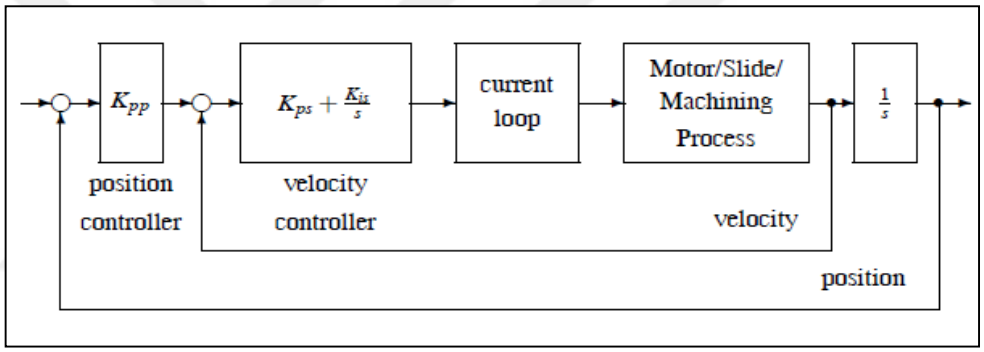

Figure 3.4 Control loops schematic (Suh et al., 2008)

In types of control mechanism, the *semi-closed loop* is the most popular and its structure has shown in Figure 3.5. Location accuracy of the axis has a great effect on the accuracy of the ball screw. Because of this reason, ball screws with high accuracy developed and are used to large extent. Therefore the precision ball screw, the problem with accuracy has practically been defeated.

Pitch-error and backlash compensations can be used in NC so that to increase the positional accuracy, if needed. In recent times, using of the Hi-Lead-type ball screw with large pitch for high-speed machining has increased (Suh et al., 2008).

The efficiency of the semi-closed loop relies on the accuracy of the ball screw and the positional accuracy via pitch compensation and backlash compensation can be boosted. Nevertheless, broadly speaking, the measure of backlash is alterable due to the weight of the work piece and position and accumulation pitch error of the ball screw is changeable pursuant to the temperature. Moreover, because the length of the ball screw is bounded for practical purposes, a rack and pinion driving system is used in large-scale machine equipment. After all, the accuracy of the rack is somewhat bounded. In this condition, the closed loop displayed in Figure 3.5 is applied.

In the *closed loop*, the position detector is connected to the machine table and the real location error is related to the control system. Closed loop and semi-closed loop are the same except in the location of the position detector and the position accuracy of closed loop is very high. After all, the resonance frequency of the machine body, stick slip, and lost motion have an effect on the servo characteristics, the machine body is a part of the position control loop. So, an error occurs due to the difference between the command position and the detected position, and the servo is rotated at a speed equivalent to this error in order to minimize it. The deflation of speed of the error is associated with the gain of the position control loop, which is an important factor to describe the property of the servo system. The gain is directly proportion to the response speed and dynamic accuracy. However, high gain leads to unstable servo system which means it is impossible to stop at the command position.

In the closed loop, the control loop system becomes unstable when the resonance frequency of the machine driving system is not sufficiently higher than the gain. Furthermore, the main factors that cause hunting are the stick slip and lost motion. It is important to increase both of the resonance frequency of the machine driving system and the rigidity of the machine, and at the same time decreasing the friction coefficient of the perturbation surface and remove the cause of lost motion (Suh et al., 2008).

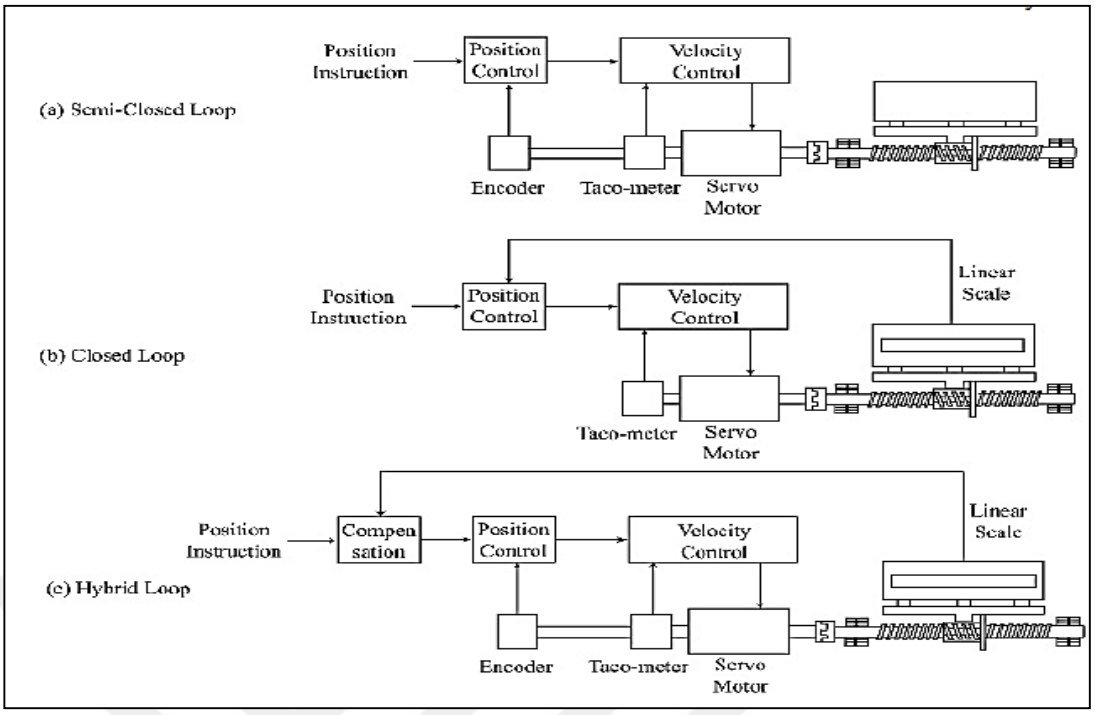

Figure 3.5 Classification of control mechanism according to position data detection method. (Suh et al., 2008).

Hybrid loop is used because of the very low gain in the closed loop which leads to poor performance with respect to positioning time and accuracy. it is used also because of the difficulty of increasing the rigidity in proportion to the weight of the moving element in the closed loop, which makes it a heavy machine .There are two kinds of control loop in the hybrid loop, first is the semi-closed loop, where position is detected from the shaft of a motor and it is possible to control with high gain because the machine is not a part of the control system and second is closed loop, which is depending on a linear scale and it increases accuracy by compensating the error that the semi-closed loop cannot control and that makes it well behaved despite the low gain so, combination of both loops makes it possible to gain high accuracy with high gain in a machine with poor condition (Suh et al., 2008).

Open loop does not have feedback. The case where the accuracy of control is not high and a stepping motor is used, open loop cannot be applied in. Because its structure is very simple and it does not need a detector and a feedback cycle. Also the accuracy of the driving system is directly influenced by the accuracy of the stepping motor, transmission, and ball screw (Suh et al., 2008).

3.3.2 System Modelling

3.3.2.1 DC Motor Equation

Since the motor is armature-controlled, and based on the Newton's law combined with the Kirchhoff's law, equation can be derived as;

$$L\frac{dI}{dt} + RI = V - K_e\dot{\theta} \tag{3.22}$$

where L is the rotor induction, I is the electrical current flow into motor, V is input voltage applied to the rotor, K_e is motor constant related to the back electromotor force and R is the resistance of rotor.

Supplied electrical current can be related to voltage in this equation. So the equation above can be derived as

$$\dot{I} = \frac{V - RI - K_e\dot{\theta}}{L} \tag{3.23}$$

3.3.2.2 Transfer Function of a DC Motor

The motor torque T_m can be expressed electrically as:

$$T_m(s) = K_m I_a(s) \tag{3.24}$$

where K_m is defined as motor constant and I_a is armature current. The armature voltage is proportional to the armature current,

$$V_a(s) = (R_a + L_a s)I_a(s) + V_b(s) \tag{3.25}$$

the back electromotive-force $V_b(s)$ related to the motor is

$$V_b(s) = K_b\omega(s) \tag{3.26}$$

where $\omega(s) = s\theta(s)$ is the transform of the angular speed. The armature current is

$$I_a(s) = \frac{V_a(s) - K_b\omega(s)}{R_a + L_a s} \tag{3.27}$$

The motor torque T_m can be expressed mechanically as :

$$T_m(s) = T_L(s) + T_d(s) \tag{3.28}$$

By rearranging this equation load torque can be obtained as:

$$T_L(s) = T_m(s) - T_d(s) \tag{3.29}$$

$T_L(s)$ is load torque and $T_d(s)$is disturbance torque (offen neglected).The load torque for rotating inertia is

$$T_L(s) = Js^2\theta(s) + Bs\theta(s) \tag{3.30}$$

Therefore, the transfer function can be obtained by taking $T_d(s) = 0$. The open-loop transfer function can be derived as follows, where the rotational speed is considered the output and the armature voltage is considered the input.

$$G(s) = \frac{\theta(s)}{V_a(s)} = \frac{K_m}{s[(Js+b)(L_as+R_a) + K_bK_m]} \tag{3.31}$$

The position can be obtained by integrating the speed, therefore, the above transfer function divided by s. The block diagram of the system can be obtained as in Figure 3.6.

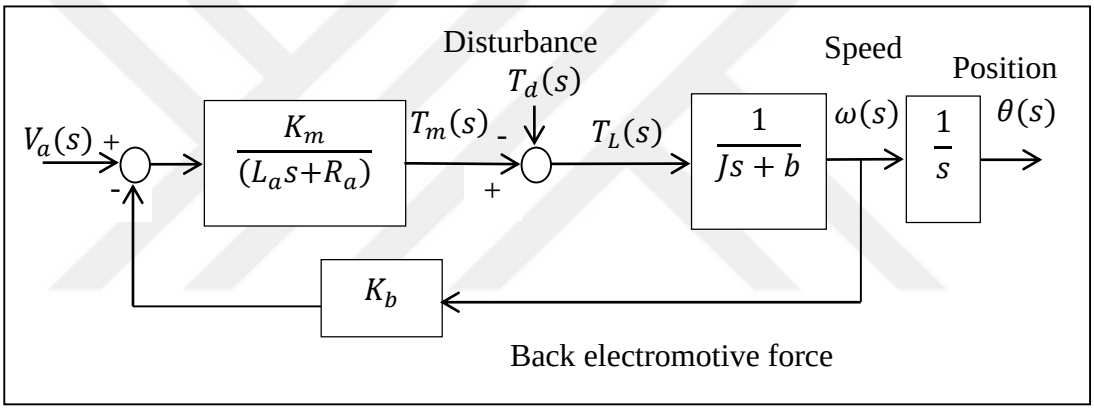

Figure 3.6 Block diagram of DC motor.

3.3.2.3 Modeling of the Feed Drive with Closed-loop

The architecture of a feed drive on an industrial CNC machine center is shown in Figure 3.7. The machine was also employed in the experimental validation. As shown in Figure 3.7(a), the feed drive is powered by a rotary servo motor via gear box and ball-screw which are the main sources of backlash. Based on this, the mechanical structure of the feed drive could be considered as a two-mass system with backlash and a reducer gain as shown in Figure 3.7(b), where the rotary movements have been transformed into equivalent linear movements.

In Figure 3.7(b), the first mass m_m is equivalent to the inertia of the rotating motor, the second mass m_l equals the mass of the slide table, and the flexible spring along with backlash and a reducer gain k_a is equivalent to the gear reducer and the ball-screw. The feed drive consists of three independent control loops: the position-control loop, the velocity-control loop, and the current- control loop. In the position loop, the command x_{cmd} is from the CNC interpolator and the feedback x_l is from a linear encoder mounted on the slide table, which means the feed drive is built up in a closed position-control loop.

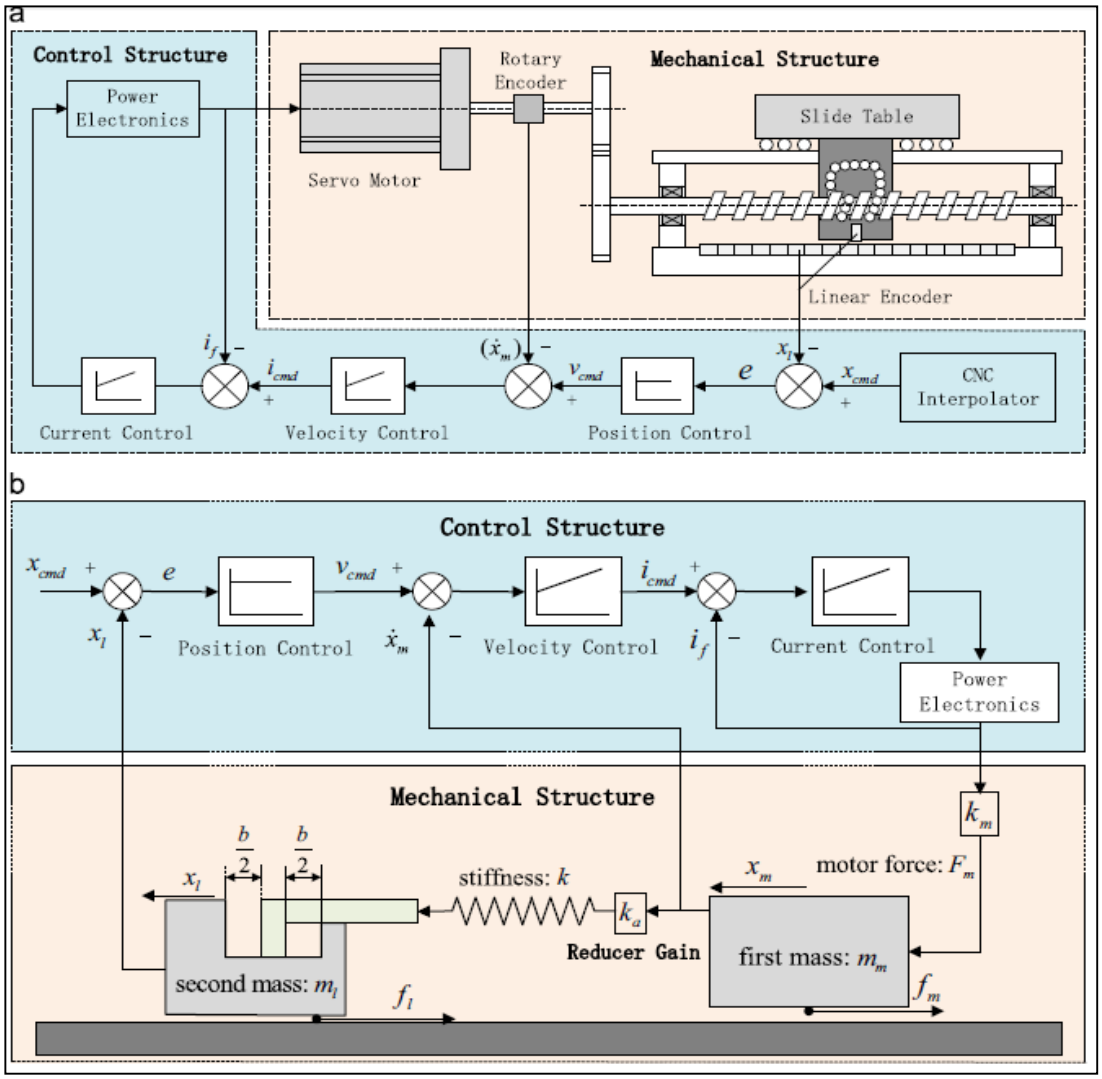

Figure 3.7 Architecture of a feed drive control system: (a) the structure block diagram of physical feed drive, and (b) the schematic diagram of the feed drive (Shi et al., 2015).

The velocity command v_{cmd} is generated from the product of the position deviation e and the position gain k_p . The velocity feedback $\dot{x}_m$ is measured by a rotary encoder mounted on the motor rotor. A PI controller is applied in the velocity loop. Permanent magnetic synchronous motor (PMSM) is employed in the feed drive, and the current controller is designed as a PI controller. The equivalent driving force F_m generated by the motor is given by the product of motor gain k_m and current feedback i_f : $F_m = k_m i_f$

The block diagram of feed drive model obtained in some research (Figure 3.8) (Shi et al., 2015)

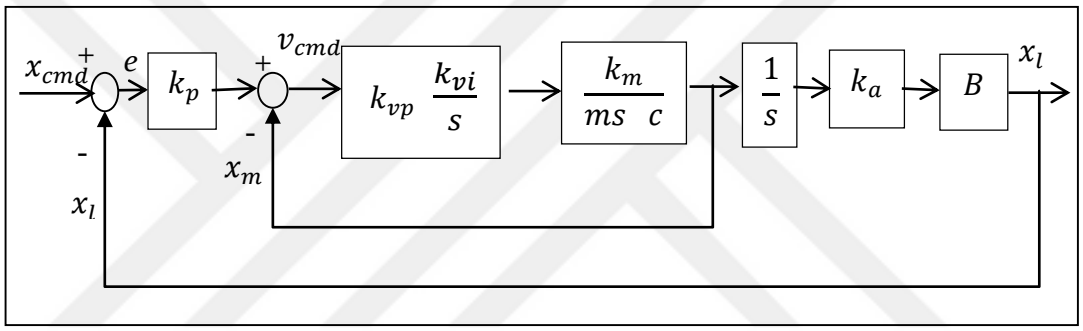

Figure 3.8 The block diagram of feed drive model (Shi et al., 2015).

3.3.3 System Analysis with Matlab®

In a control system; for a step reference input, expected output design criteria, allowable maximum overshoot 15 percent and settling time 0.5 seconds. Furthermore steady-state error is not allowed.

Three axis motors need to check stability. Motor parameters found by choosing 2000 rpm motors. Required parameters to check stability of selected dc servo motors given at Table 3.6.

Table 3.6 Selected motors parameters

Axis	Z	Y	X
J (Kg.m²)	$370*10^{-6}$	$723*10^{-6}$	$5.1*10^{-3}$
b (N.m.s)	$40.17*10^{-6}$	$74.48*10^{-6}$	$3.96*10^{-3}$
K (N.m/A)	0.293	0.297	0.401
R (Ω)	5.6	2.4	0.56
L (H)	0.0155	0.0061	0.0018

3.3.3.1 Open-loop Response

An m-file created and motor parameters entered. Transfer function created by using MATLAB "*tf*" command. Given parameters and performed controls are for z axis. Other two axis examined so.

```
J = 370E-6;
b = 40.17E-6;
K = 0.293;
R = 5.6;
L = 0.0155;
s = tf('s');
TMpos= K/(s*((J*s+b)*(L*s+R)+K^2))
```

0.293

5.735e-06 s^3 +0.002073 s^2 +0.0860 s

Continuous-time transfer function

For analyzing step response of the open loop system MATLAB command "*step*" used.

```
t = 0:0.001:0.2;
step(TMpos,t)
```

Following plot shown in Figure 3.9 performed. It can be seen that when 1 volt is applied to the system the motor position grows unbounded. This is obviously at odds with the given requirements, in particular, that there be no steady-state error.

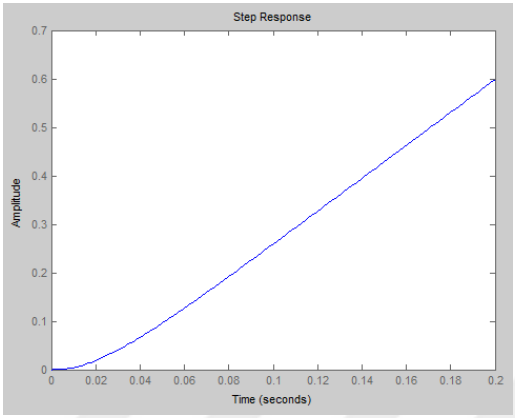

Figure 3.9 Step response

The open-loop response of the system is not even stable. Stability of a system can be verified with the MATLAB command "*isstable*" where a returned value of TRUE (1) indicates that the system is stable and a returned value of FALSE (0) indicates that the system is not stable.

```
isstable(TMpos)
ans =
    0
```

Stability of the system can also be determined from the poles of the transfer function where the poles can be identified using the MATLAB command *pole* as shown below.

```
pole(TMpos)
ans =

    0
 -313.5292
 -47.8697
```

As indicated by this function two poles are in the left half of the complex *s*-plane. A pole on the imaginary axis indicates that the free response of the system will not grow unbounded, but also will not decay to zero. Even though the free response will not grow unbounded, a system with a pole on the imaginary axis can grow unbounded when given an input, even when the input is bounded. This fact is in agreement with what we have already seen. In this particular case, the pole at the origin behaves like an integrator. Therefore, when the system is given a step input its output continues to grow to infinity in the same manner that an integral of a constant would grow to infinity as the upper limit of the integral is made larger.

3.3.3.2 Closed-loop Response

The closed-loop transfer function with the controller *C*(*s*) in Figure 3.10 can be generated using the MATLAB command "*feedback"* as shown below. Basic schematic of closed-loop control shown in Figure 3.7.

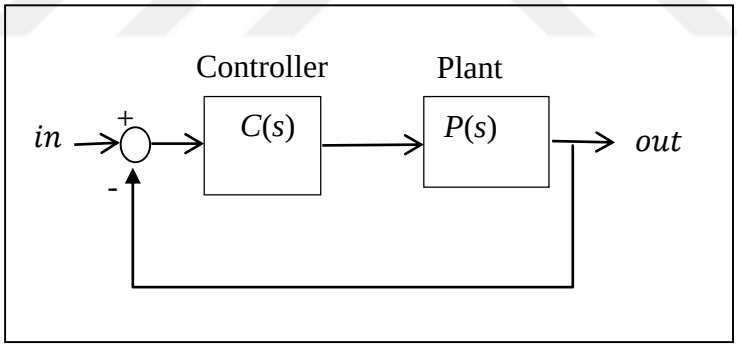

Figure 3.10 Block diagram of closed-loop control

```
analysis = feedback(TMpos,1)
analysis =
                0.293
  ---------------------------------------------
  5.735e-06 s^3 + 0.002073 s^2 + 0.08607 s + 0.293
Continuous-time transfer function.
```

The corresponding unit step response can be generated by adding *step(analyis,t)* command at the end of m-file. The annotations for the peak response, settling time, and final value can be added to the plot from the right-click menu under *Characteristics.* Examining the closed-loop step response, the addition of feedback has stabilized the system (Figure 3.11).

step(analysis,t)

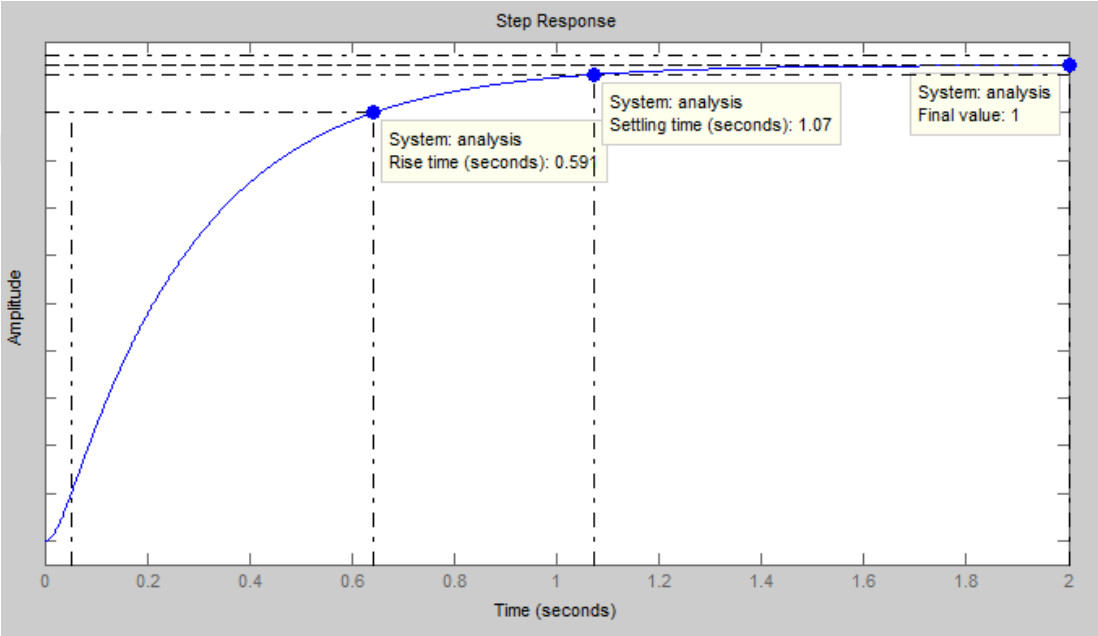

Figure 3.11 Step response with closed loop control

On fact, the steady-state error appears to be driven to zero and the overshoot is less than 16%, though the settle time requirement is not met. The character of the resulting step response is again indicated by the location of the poles of the system's transfer function just like the system's stability properties were. This information can also be determined using the MATLAB command "*damp"* as shown below.

```
damp(analysis)
Eigenvalue                  Damping     Frequency
-2.24e+01 + 1.74e+01i       7.90e-01    2.84e+01
-2.24e+01 - 1.74e+01i       7.90e-01    2.84e+01
-3.17e+02                   1.00e+00    3.17e+02
 (Frequencies expressed in rad/seconds)
```

Since the real pole is faster than complex poles its effect on the dynamic response of the system will be minimal. Therefore, the damping (*zeta* = 0.79) and the natural frequency (*Wn* = 28.4) of the of the closed-loop system.

Overall m-file will calculate the overshoot and 2% settle time predicted by these poles assuming that they dominate, in other words, that we have a canonical underdamped second-order system.

```
J = 370E-6;
b = 40.17E-6;
K = 0.293;
R = 5.6;
L = 0.0155;
s = tf('s');
TMpos = K/(s*((J*s+b)*(L*s+R)+K^2))
 t = 0:0.001:2;
 analysis = feedback(TMpos,5)
 step(analysis,t)
 damp(analysis)
 [Wn,zeta,poles] = damp(analysis);
Overshoot = exp((-zeta(1)*pi)/sqrt(1-zeta(1)^2))
Settlingtime = 4/(zeta(1)*Wn(1))
```

In Figure 3.12 step response of Z axis with feedback (5) performed and outputs are;

TMpos = K/(s((J*s+b)*(L*s+R)+K^2))*

analysis = feedback(TMpos,5)

TMpos = 0.293

5.735e-06 s^3 + 0.002073 s^2 + 0.08607 s

Continuous-time transfer function.

analysis = 0.293

5.735e-06 s^3 + 0.002073 s^2 + 0.08607 s + 1.465

Continuous-time transfer function.

Eigenvalue	*Damping*	*Frequency*
-2.24e+01 + 1.74e+01i	*7.90e-01*	*2.84e+01*
-2.24e+01 - 1.74e+01i	*7.90e-01*	*2.84e+01*
-3.17e+02	*1.00e+00*	*3.17e+02*

(Frequencies expressed in rad/seconds)

Overshoot =0.0175

Settlingtime =0.1783

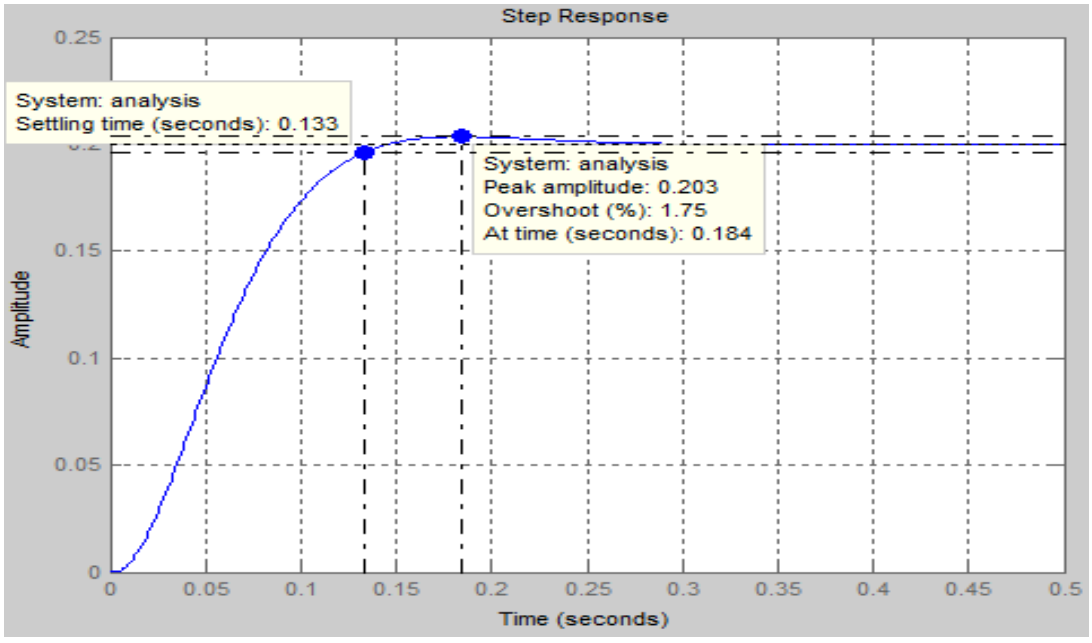

Figure 3.12 Step response of Z axis with feedback

In Figure 3.13 step response of Y axis with feedback (8) performed and outputs are;

Overshoot =0.0532

Settlingtime =0.1470

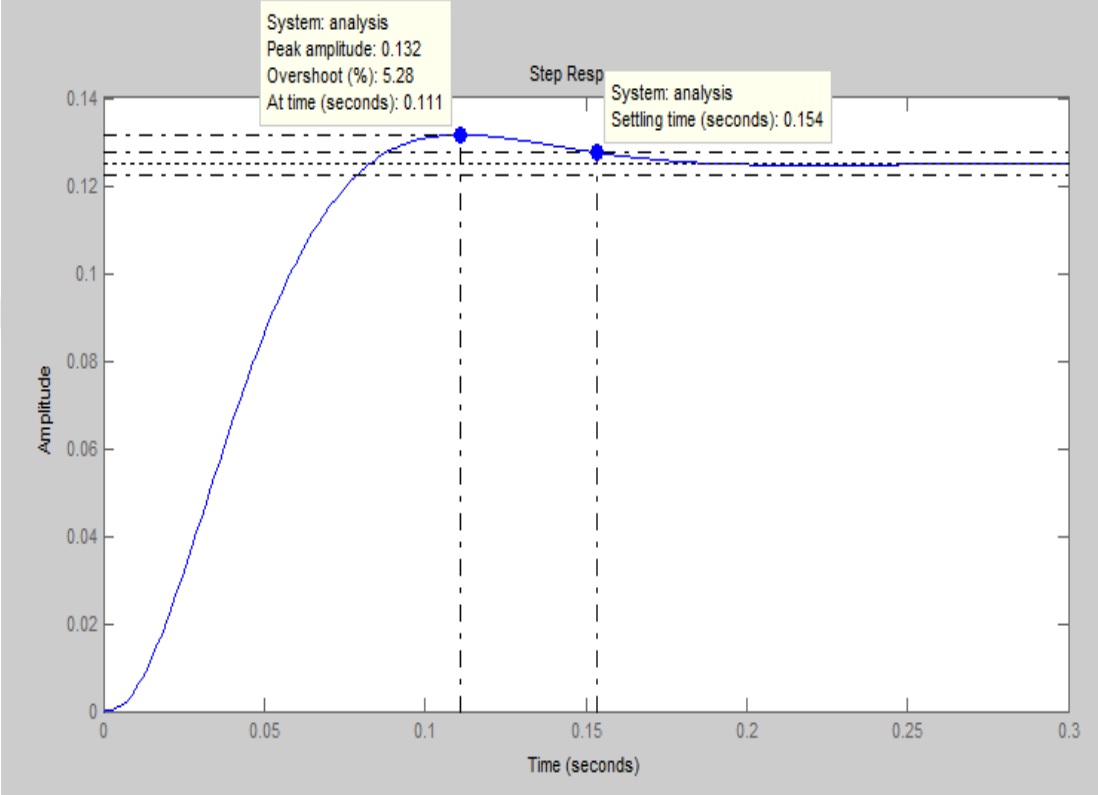

Figure 3.13 Step response of Y axis with feedback

In Figure 3.14 step response of X axis with feedback (15) performed and outputs are;

Overshoot =0.1007

Settlingtime =0.1329

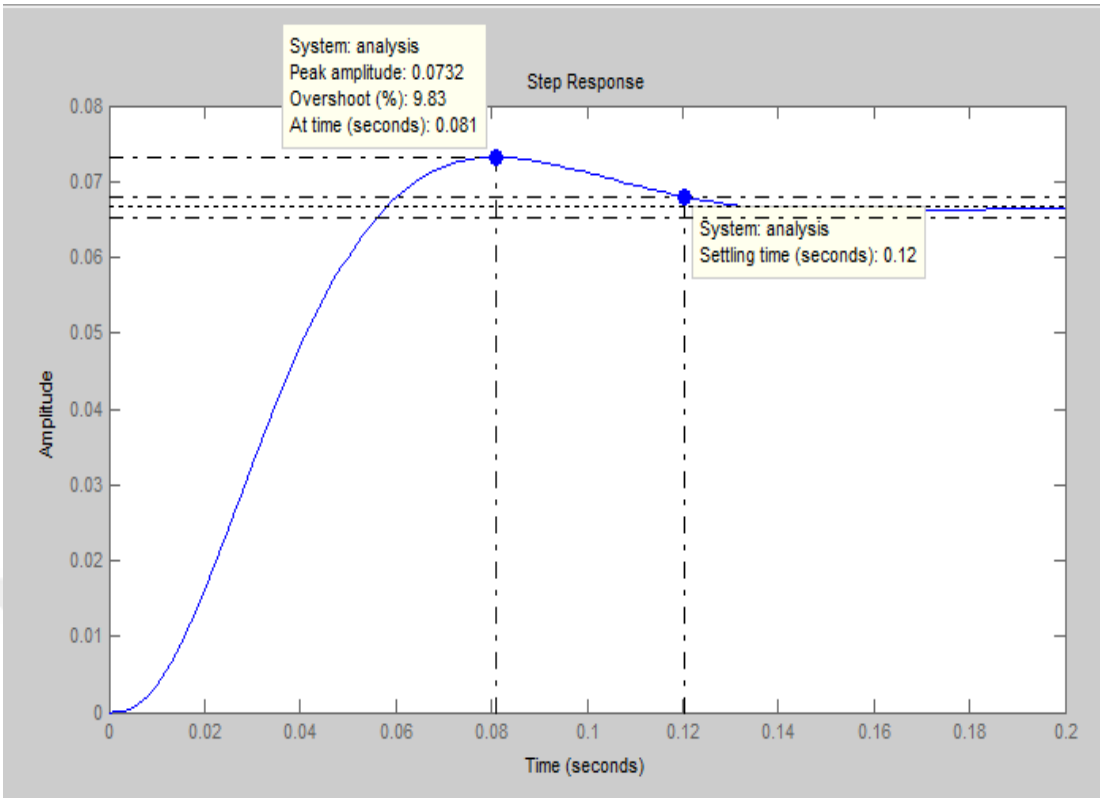

Figure 3.14 Step response of X axis with feedback

The above results closely match the overshoot and settle time from the step response plot above which explicitly captured the effect of the third, non-dominant pole. Throughout different controllers will be designed to reduce the settle time of the closed-loop step response to meet the given 40 millisecond requirement while still meeting the other system requirements, including the zero steady-state error in the presence of a step disturbance.

Control parameters can also obtained by MATLAB PID Tuner. "*pidtool"*command opens the PID Tuner. Figure 3.15 represents tuned X axis, Figure 3.16 represents Y axis and Figure 3.17 represents Z axis motor step responses. PID parameters obtained for all motor axis.

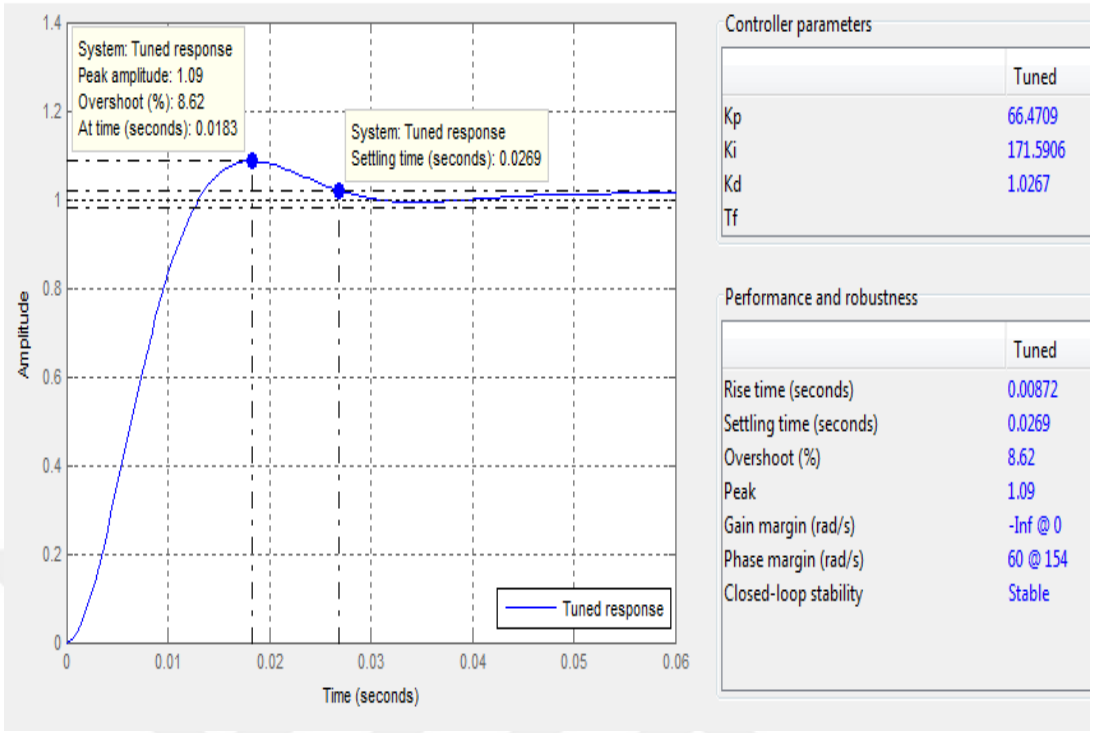

Figure 3.15 X axis step response with PID Tuner

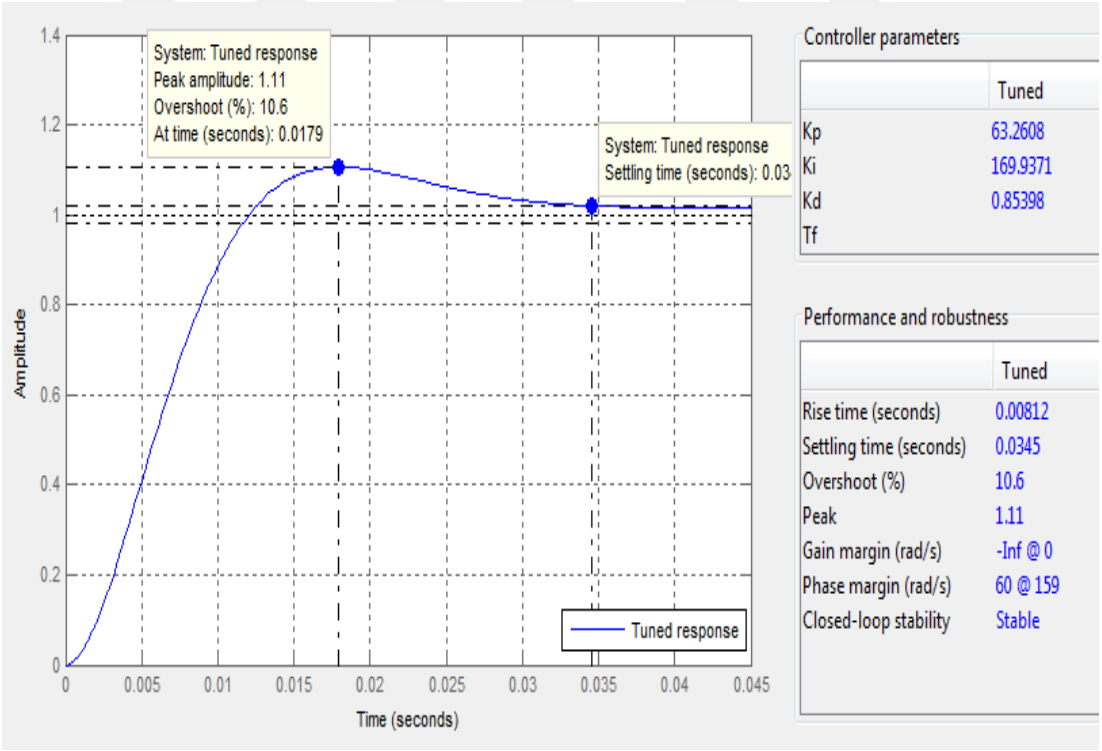

Figure 3.16 Y axis step response with PID Tuner

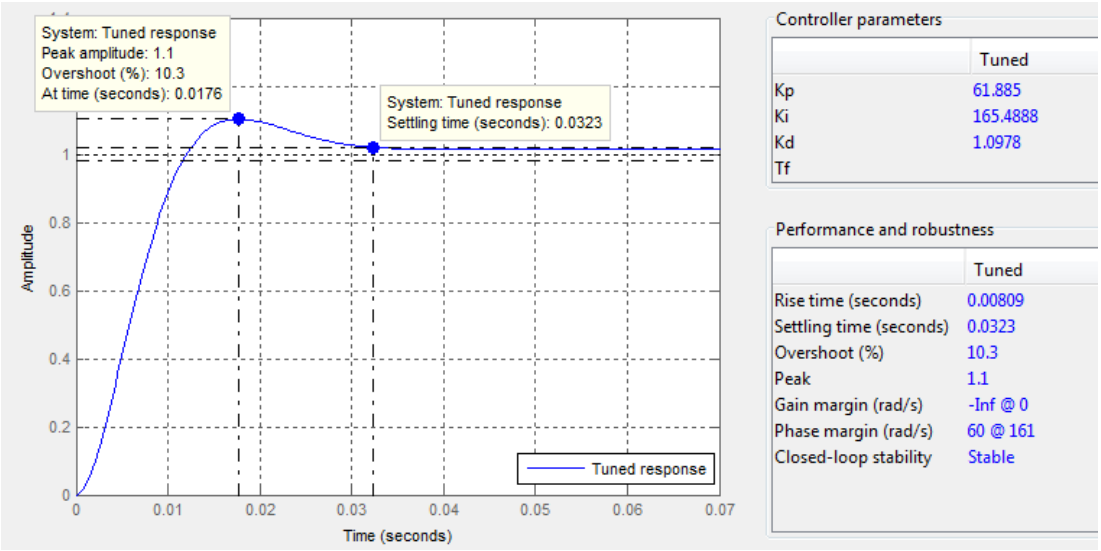

Figure 3.17 Z axis step response with PID Tuner

Settling time reduced and design criteria accomplished. Table 3.7 shows settling time is less than 0.05 seconds and overshoot is less than 12%.

Table 3.7 PID parameters

Axis	X	Y	Z
K_p	66.4709	63.2608	61.885
K_i	171.5906	169.9371	165.4888
K_d	1.0267	0.85398	1.0978
Rise time (sec.)	0.00872	0.00812	0.00809
Settling time (sec.)	0.0269	0.0345	0.0323
Overshoot (%)	8.62	10.6	10.3
Peak	1.09	1.11	1.1

3.3.4 Simulink Modeling

To build the simulation model, open Simulink and open a new model window. Then insert an Integrator block from the Simulink/Continuous library shown in Figure 3.18 and draw lines to and from its input and output terminals.

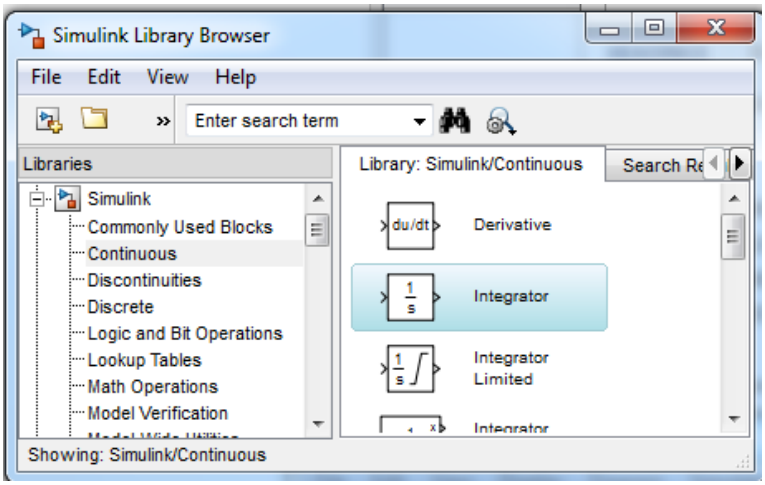

Figure 3.18 Simulink modelling adding blocks

Label the input line "d2/dt2(theta)" and the output line "d/dt(theta)" as shown in Figure 3.19 below. To add such a label, double-click in the empty space just above the line. Insert another Integrator block attached to the output of the previous one and draw a line from its output terminal. Label the output line "theta". Insert a third Integrator block above the first one and draw lines to and from its input and output terminals. Label the input line "d/dt(i)" and the output line "i".

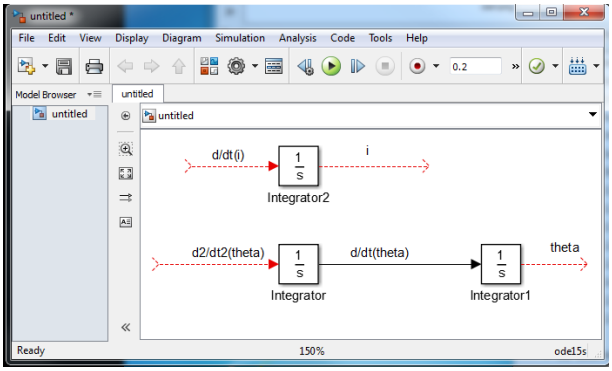

Figure 3.19 Simulink modelling adding integrator

The angular acceleration is equal to 1 / J multiplied by the sum of two terms (one positive, one negative). Similarly, the derivative of current is equal to 1 / L multiplied by the sum of three terms (one positive, two negative). Continuing to model these equations in Simulink shown in Figure 3.20, follow the steps given below.

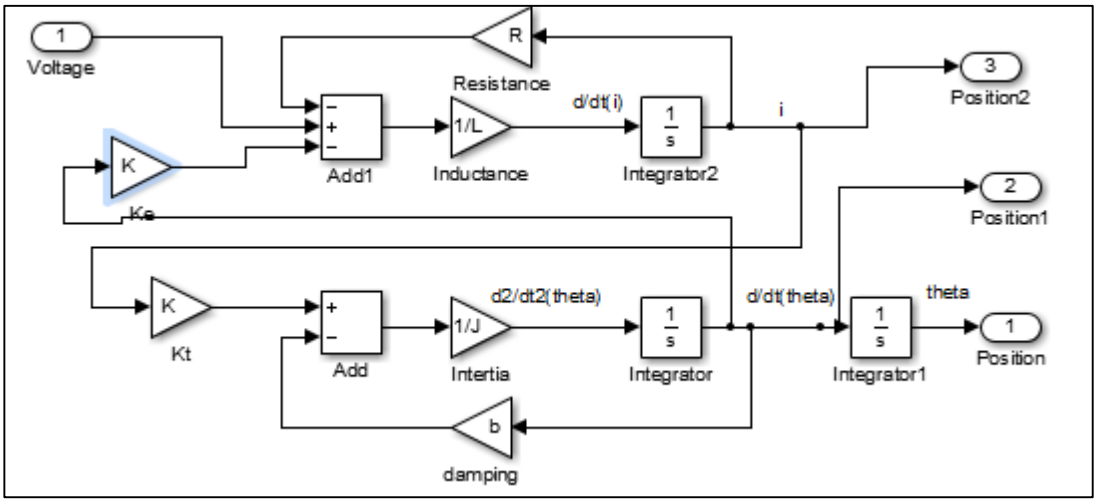

Figure 3.20 Simulink modelling

Insert two Gain blocks from the Simulink/Math Operations library, one attached to each of the leftmost integrators. Edit the Gain block corresponding to angular acceleration by double-clicking on it and changing its value to "1/J". Change the label of this Gain block to "Inertia" by clicking on the word "Gain" underneath the block. Similarly, edit the other Gain's value to "1/L" and its label to "Inductance". Insert two Add blocks from the Simulink/Math Operations library, one attached by a line to each of the Gain blocks. Shown in Figure 3.21. Edit the signs of the Add block corresponding to rotation to "+-" since one term is positive and one is negative. Edit the signs of the other Add block to "-+-" to represent the signs of the terms in Kirchoff's equation.

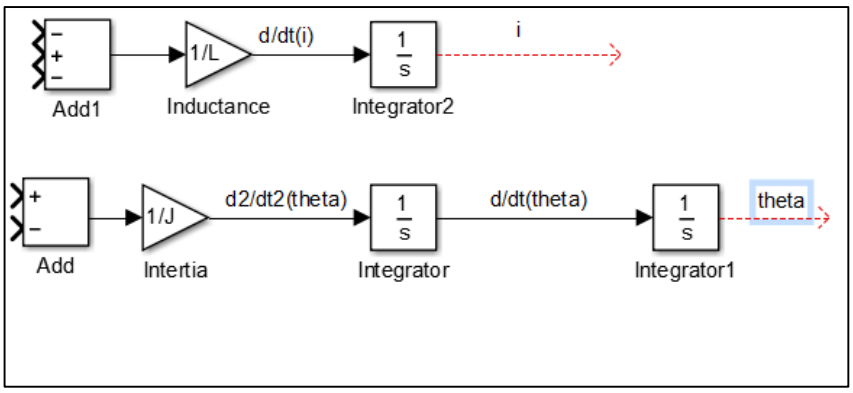

Figure 3.21 Simulink modelling adding Gain and Add blocks

Now, we will add in the torques which are represented in Newton's equation shown in Figure 3.22. First, we will add in the damping torque. Insert a Gain block below the "Inertia" block, then select it by single-clicking on it. Next select Flip Block from the Format menu (reached by right-clicking) to flip the block from left to right. You can also flip the selected block by holding Ctrl-I. Set the Gain value to "b" and rename the block "damping".

Tap a line (hold **Ctrl** while drawing or right-click) off the first rotational Integrator's output (d/dt(theta)) and connect it to the input of the damping Gain block. Draw a line from the damping Gain output to the negative input of the rotational Add block. Next, we will add in the torque from the armature. Insert a Gain block attached to the positive input of the rotational Add block with a line. Edit it's value to "K" to represent the motor constant and label it "Kt". Continue drawing the line leading from the current Integrator and connect it to the Kt Gain block.

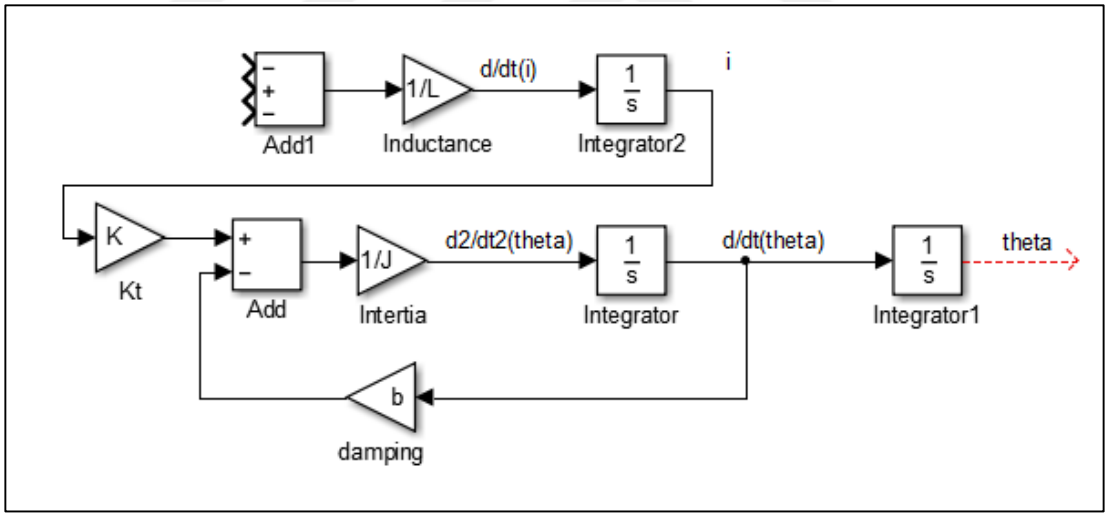

Figure 3.22 Adding damping and inertia Gain blocks

Now, we will add in the voltage terms which are represented in Kirchoff's equation. First, we will add in the voltage drop across the armature resistance. Insert a Gain block above the Inductance block and flip it left to right. Set the Gain value to "R" and rename this block "Resistance". Tap a line off the current Integrator's output and connect it to the input of the Resistance Gain block.

Draw a line from the Resistance Gain output to the upper negative input of the current equation Add block. Next, we will add in the back emf from the motor.

Insert a Gain block and attach it to the other negative input of the current Add block with a line. Edit its value to "K" to represent the motor back emf constant and label it "Ke".

Tap a line off the first rotational Integrator's output (d/dt(theta)) and connect it to the Ke Gain block. Figure 3.23 obtained.

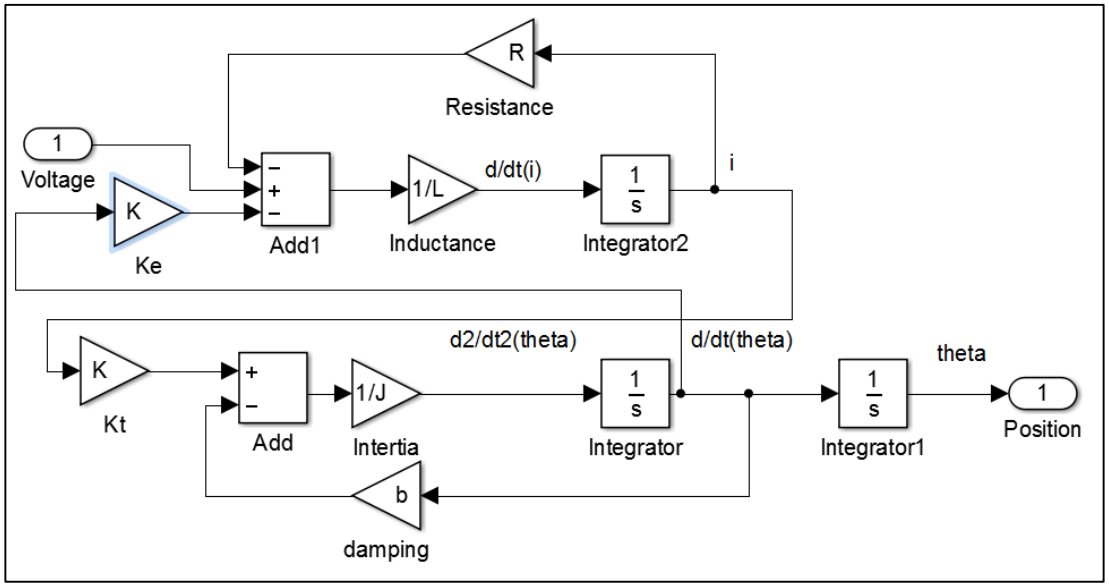

Figure 3.23 Adding in and out ports

Now the model is built and we just need to add the voltage input and monitor the position output. We will insert In1 and Out1 ports from the Simulink/Ports & Subsystems library as shown Figure 3.24 so that we may save the motor model as a subsystem.

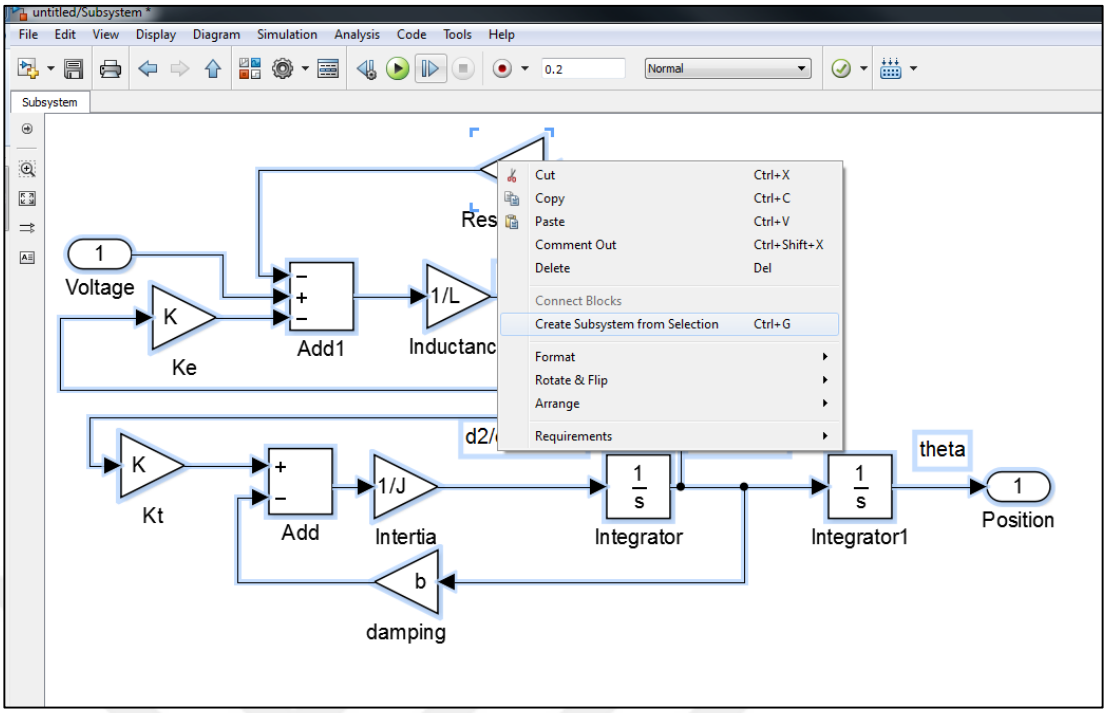

Figure 3.24 Creating subsystem

With adding a step reference input to "voltage input" numbered (1) and scope blocks to current speed and position output as shown in Figure 3.25

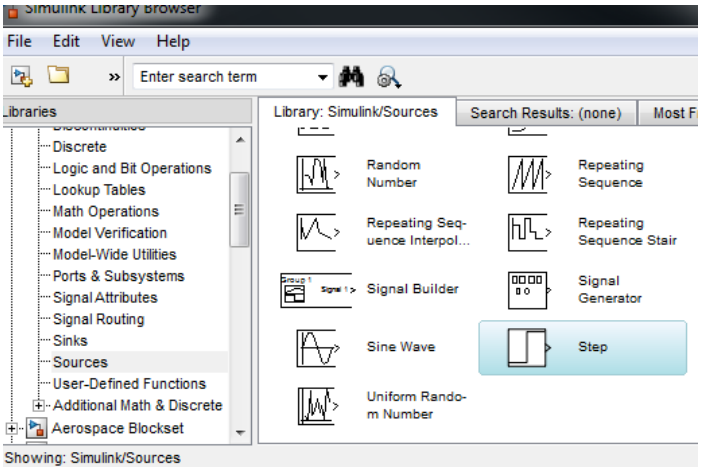

Figure 3.25 Adding step reference input

All three axis parameters found in previous chapters, entered on MATLAB command window. Represented below in Figure 3.26 X axis responses speed of motor rotor settled under 0.05 seconds with an ideal current value of 0.2 amperes. Position at 0.2. second come up to 0.4488.

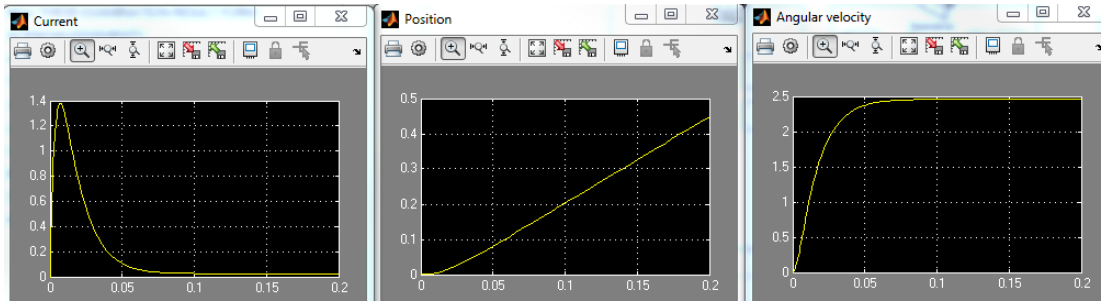

Figure 3.26 X axis outputs

Represented below in Figure 3.27 Y axis responses speed of motor rotor settled under 0.05 seconds with an ideal current value of 0.05 amperes. Position at 0.2. second come up to 0.606.

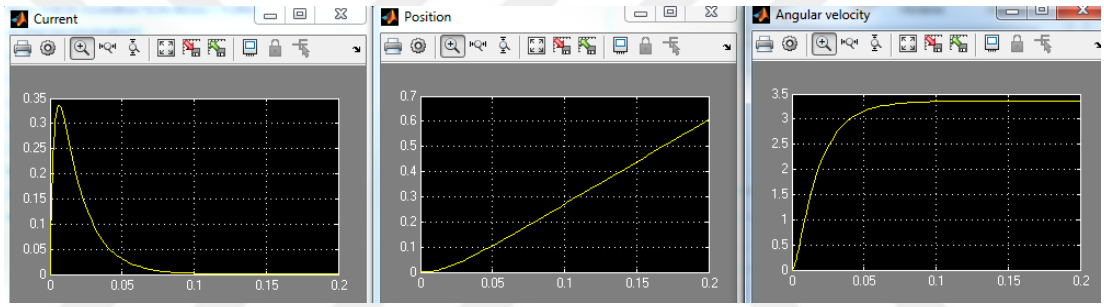

Figure 3.27 Y axis outputs

Represented below in Figure 3.28 Z axis responses speed of motor rotor settled under 0.05 seconds with an ideal current value under 0.05 amperes. Position at 0.2. second come up to 0.5988.

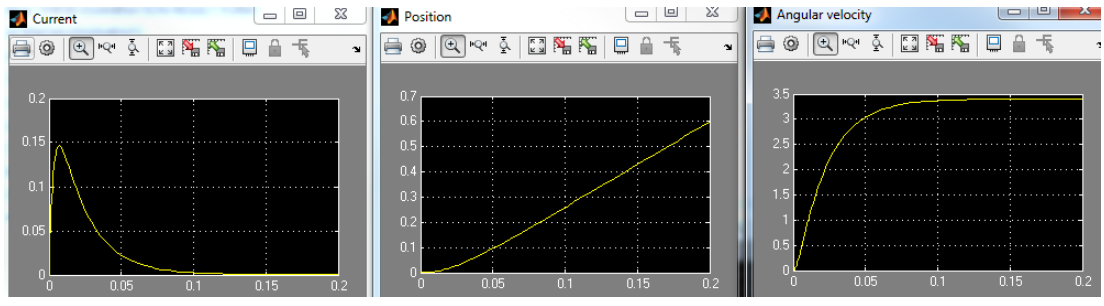

Figure 3.28 Z axis outputs

3.3.5 Building the Model with Simscape

In this section, we alternatively show how to build the DC Motor model using the physical modeling blocks of the Simscape extension to Simulink. The blocks in the Simscape library represent actual physical components; therefore, complex multi-domain models can be built without the need to build mathematical equations from physical principles as was done above by applying Newton's laws and Kirchoff's laws.

Open a new Simulink model and insert the following list of blocks. DC Motor block from the Simscape/SimElectronics/Actuators library. Current Sensor block from the Simscape/Foundation Library/Electrical/Electrical Sensors library. Controlled Voltage Source block from the Simscape/Foundation Library/Electrical/Electrical Sources library

Three PS-Simulink Converter blocks, one Simulink-PS Converter, and a Solver Configuration block from the Simscape/Utilities library. Electrical Reference block from the Simscape/Foundation Library/Electrical/Electrical Elements library. Ideal Rotational Motion Sensor block from the Simscape/Foundation Library/Mechanical/Mechanical Sensors library. Mechanical Rotational Reference block from the Simscape/Foundation Library/Mechanical/Rotational Elements library. Three Out1 blocks and one In1 block from the Simulink/Ports & Subsystems library.

The DC Motor block models both the electrical and mechanical characteristics of the motor as shown in Figure 3.29. Double-click on the block in order to assign numerical values to the motor's physical parameters. We will specifically define the motor by equivalent circuit parameters as chosen from the Motor Parameterization drop-down menu. Assign the various parameters the following variables and units. We will eventually define these variables at the command line of the MATLAB workspace. Note that since the motor torque constant and the back emf constant are equal if the units are consistent, we only need to define one of the two.

Armature resistance = R [Ohm]

Armature inductance = L [H]

Back emf constant = K [V/(rad/s)]

Rotor inertia = J [kg*m^2]

Rotor damping = b [N*m/(rad/s)]

The Ideal Rotational Motion Sensor block represents a device that measures the difference in angular position and angular velocity between two nodes. In this case, we employ the block to measure the position and velocity of the motor shaft as compared to a fixed reference represented by the Mechanical Rotational Reference block. The Current Sensor block represents another sensor, specifically it measures the current drawn by the motor.

The PS-Simulink blocks convert physical signals to Simulink output signals, while the Simulink-PS block conversely converts a Simulink input signal to a physical signal. These blocks can be employed to convert the Simscape signals, which represent physical quantities with units, to Simulink signals, which don't explicitly have units attached to them. These blocks, in essence, can perform a unit's conversion between the physical signals and the Simulink signals. In our case, we can leave the units undefined since the input and output of each of the conversion blocks have the same units. In general, the Simscape block set is employed to model the physical plant, while the Simulink block set is employed to model the controller.

The Solver Configuration block is employed for defining the details of the numerical solver employed in running the Simscape simulation. We will use the default settings for this block. Next, connect and label the components so that they appear as in the figure below. Double-click on the lines which are connected to the Out1 blocks and label them "Current", "Position", and "Speed". Also click on the In1 block and label it "Voltage".

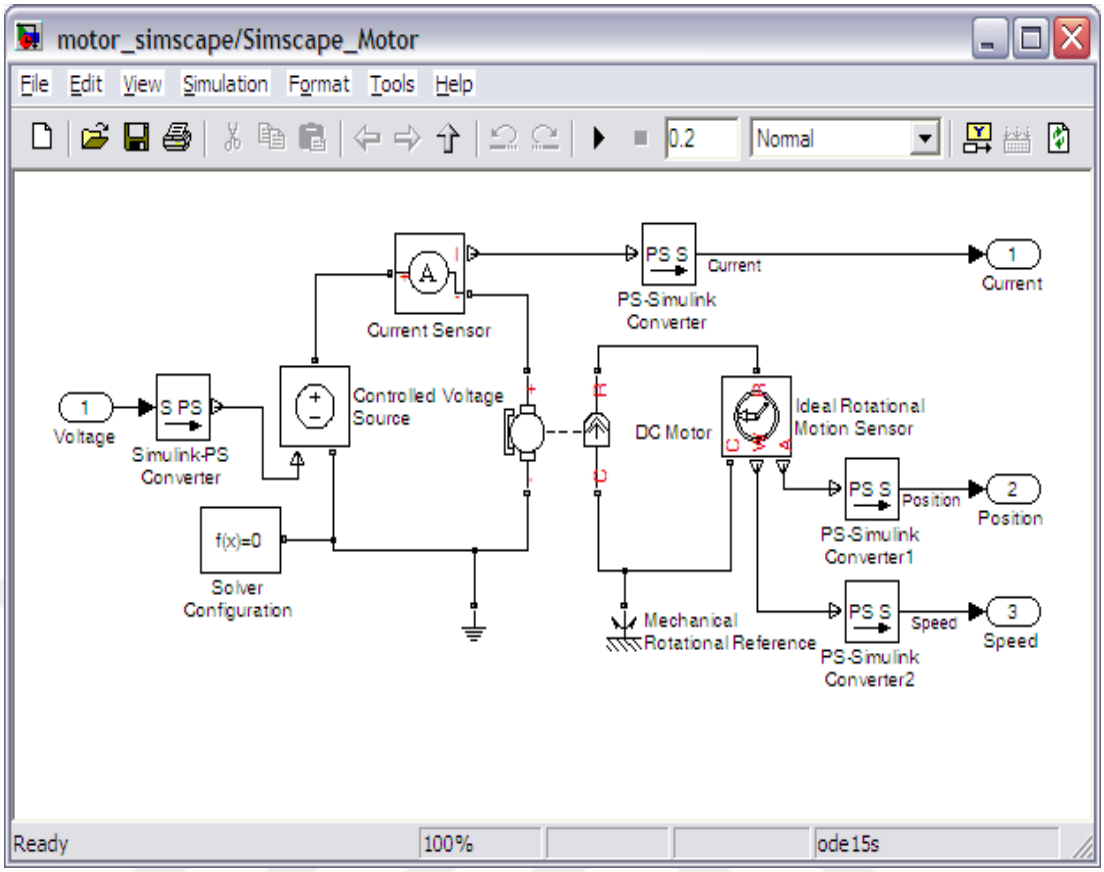

Figure 3.29 Simscape model of the system

We now need to define the parameters used in our simulation. Type the following commands at the prompt of the MATLAB command window.

J = 370E-6;

b = 40.17E-6;

K = 0.293;

R = 5.6;

L = 0.0155;

You can save these components in a single subsystem with one input and three outputs. Select all of the blocks and then choose Create Subsystem from the Edit menu. Also label the subsystem and signals as shown in the following Figure 3.30.

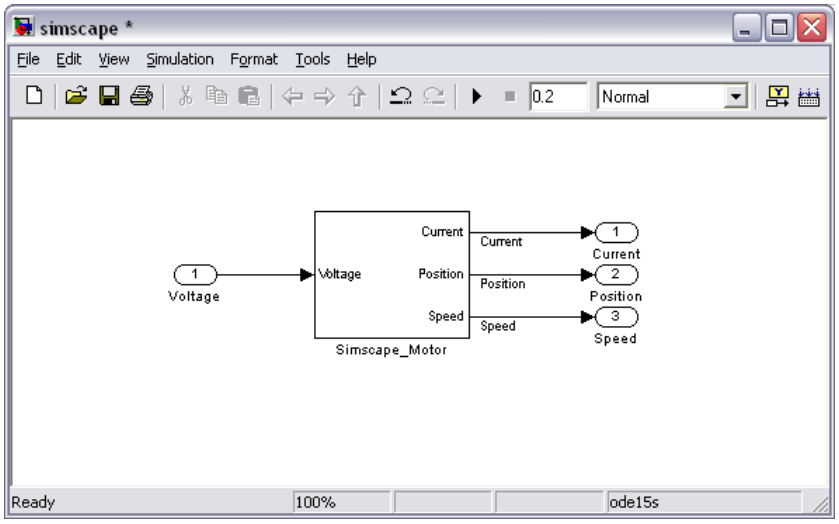

Figure 3.30 Simscape model with subsystem

With adding a step reference to input and scope blocks to output shown in Figure 3.31; systems current, position and speed responses can be displayed.

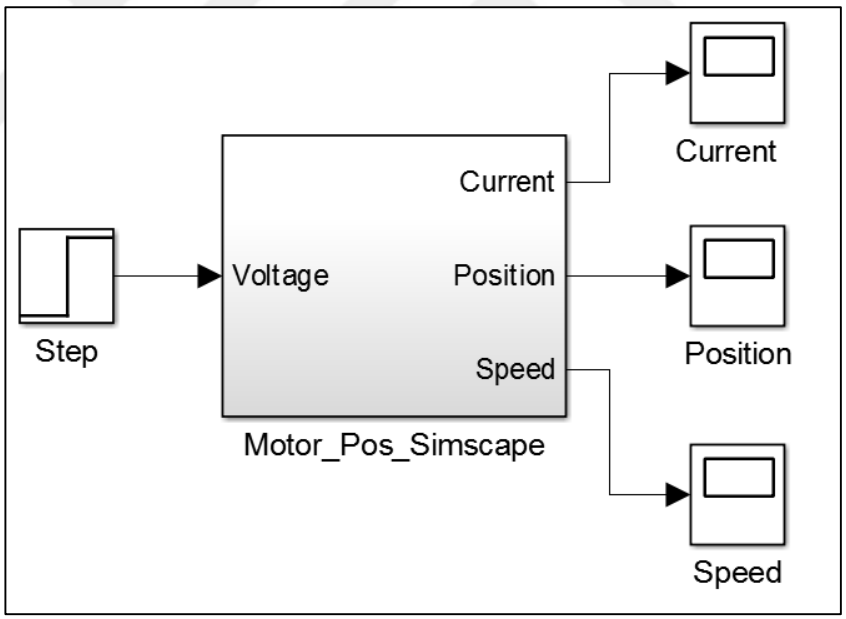

Figure 3.31 Adding source and scope blocks

X axis examined and trajectories displayed in Figure 3.32. current is settled under 0.02 seconds with an ideal current value under 1.7765 amperes. Position at 0.2. second come up to 0.1739 radians and speed 1.7086 radians per second.

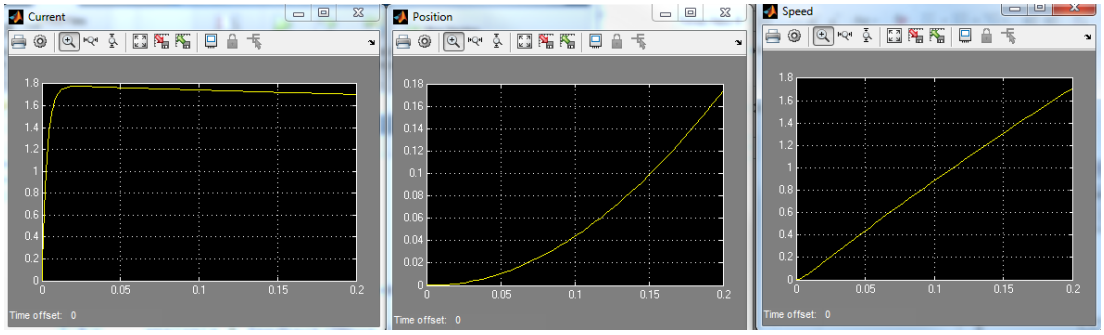

Figure 3.32 X axis step response with Simscape modelling

Y axis examined and trajectories displayed in Figure 3.33. Current is settled under 0.02 seconds with an ideal current value under 0.414 amperes. Position at 0.2. second come up to 0.2976 radians and speed 2.9618 radians per second.

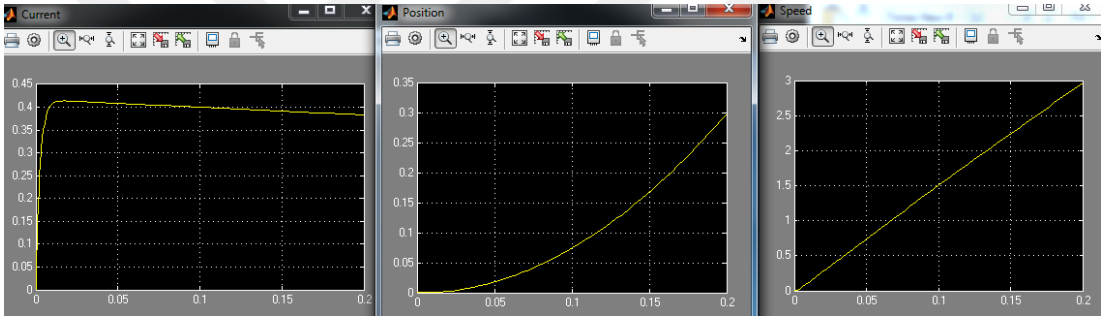

Figure 3.33 Y axis step response with Simscape modelling

Z axis examined and trajectories displayed in Figure 3.34. Current is settled under 0.02 seconds with an ideal current value under 1.7775 amperes. Position at 0.2. second come up to 0.2497 radians and speed 2.4931 radians per second.

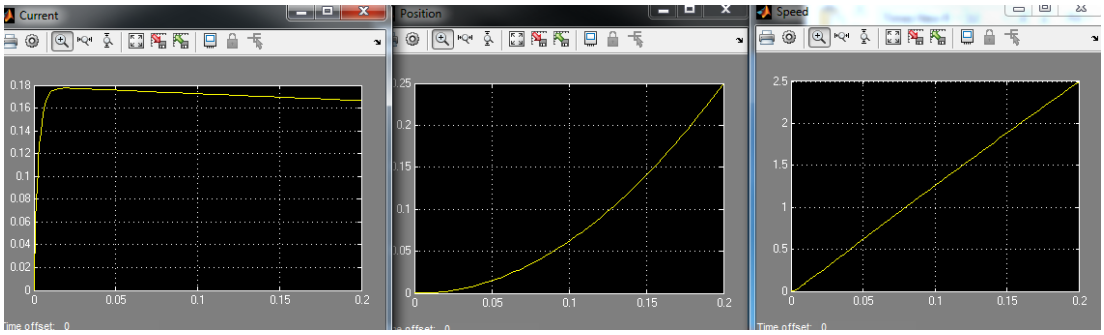

Figure 3.34 Z axis step response with Simscape modelling

CHAPTER FOUR
CONCLUSION

In this study, Vacuum Assisted Resin Transfer Molding (VARTM) process superiorities are described by considering the composite manufacturing techniques used to produce polymer composite materials. In the first part of the study it is stated that with this method it is more precise and faster to produce materials.

By taking CNC milling machines into consideration it is aimed to design three-axis CNC Router. Primarily production of EPS/XPS molds widely used in VARTM technique and also in three-dimensional surface processing computer-aided mold processing machines (CNC Router) is designed.

Thanks to SolidWorks part geometries created for required work space. Stress, tension, displacement and natural frequency analysis are performed in accordance with generated geometry custom designed parts. It is found that foam cutting forces are too little to be negligible besides the acceleration forces arising.

In chapter 3.3.3 PID parameters found with less than a settling time of 0.05 seconds for all axis. This showed that the motors are totally controllable with PID controller. On the other hand this is mechanically impossible. Driving the motors with top speed (2000 rpm) is needed when the router sweep all the work space in 3 seconds. So there is no need to accelerate motor in 0.05 seconds 0.5 second is enough.

In chapter 3.3.4 with P controller X axis responses speed of motor rotor settled under 0.05 seconds with an ideal current value of 0.2 amperes. Position at 0.2. second come up to 0.4488.Y axis responses speed of motor rotor settled under 0.05 seconds with an ideal current value of 0.05 amperes. Position at 0.2. second come up to 0.606.Z axis responses speed of motor rotor settled under 0.05 seconds with an ideal current value under 0.05 amperes. Position at 0.2. second come up to 0.5988. Positions at 0.2. second are between 0.45-0.6 radians which means 1.3mm for x axis. 1.16mm for y axis and 0.57mm for z axis are enough for the system. For 1 volt input these values are

acceptable but X axis motor is 150 volts Y and Z axis motors are 100 volts. Adding a resistance with a value of 300 Ω can prevent this odd. Finally current values are 0.499, 0.301 and 0.3262 Amperes respectively. These results brings acceleration values at 0.25 m/s^2 at 0.5.th second.

In chapter 3.3.5 current is settled under 0.02 seconds with an ideal current value under 1.7765 amperes. Positions at 0.2. second come up to 0.1739-0.2976 radians and speed 1.7086-2.9618 radians per second. Which are consistent with previous values.

Speed, power and torque of motors are calculated and appropriate motors are determined. Motor parameters for controller design are obtained. Proportional Integral Derivative (PID) controller designed and calculated via MATLAB through motor parameters. Thanks to MATLAB/Simulink toolbox closed loop control block formed and simulated, thus PID gain values are obtained

REFERENCES

Albert, A. (2011). *Understanding CNC Routers.* Vancouver, Canada: FPInnovations-Forintek Division.

Chittajallu, K. M. (2004). *Computational modeling of the Vacuum Assisted Resin Transfer Molding (VARTM) Process.* M.Sc. Thesis, Clemson University, South Carolina.

Goren, A., & Atas, C. (2008). Manufacturing of polymer matrix composites using vacuum assisted resin infusion molding. *Archives of Materials Science and Engineering*, *34*(2), 117-120.

Gurit, (n.d.). Retrieved September 9, 2015, from http://www.gurit.com/files/documents/guide-to-compositesv5webpdf.pdf

Heider, D., & Gillespie Jr, J. W. (2008). VARTM variability and substantiation. *Center for Composite Materials* 68(3-4), 699-708.

Loos, A. C. (2001). Low-cost fabrication of advanced polymeric composites by resin infusion processes. *Advanced Composite Materials*, *10*(2-3), 99-106

MEGEP, (n.d.). Retrieved September 9, 2015, from http://megep.meb.gov.tr/mte_program_modul/moduller_pdf/Kompozit%20Tekne%22Ve%20Yat%20Kal%C4%B1p%20Haz%C4%B1rlama.pdf

Shi, S., Lin, J., Wang, X., & Xu, X. (2015). Analysis of the transient backlash error in CNC machine tools with closed loops. *International Journal of Machine Tools and Manufacture*, *93*, 49-60.

Suh, S. H., Kang, S. K., Chung, D. H., & Stroud, I. (2008). *Theory and design of CNC systems*. Postech: Springer Science & Business Media.

Takeda, F., Nishiyama, S., Hayashi, K., Komori, Y., Suga, Y., & Asahara, N. (2005). Research in the application of the VaRTM technique to the fabrication of primary aircraft composite structures. *Mitsubishi Heavy Industries. Technical Review*, *42*(5), 1-5.

Tanoğlu, M., & Seyhan, A. T. (2003). Investigating the effects of a polyester preforming binder on the mechanical and ballistic performance of E-glass fiber reinforced polyester composites. *International Journal of Adhesion and Adhesives*, *23*(1), 1-8.

Xiaolan, S. (2003). *Vacuum Assisted Resin Transfer Molding (VARTM): Model development and verification.* Ph.D. Thesis, Virginia Polytechnic Institute and State University, Virginia.

Yokozeki, T., Kobayashi, Y., Aoki, T., Yoshida, D., & Hirata, T. (2013). VaRTM process of composites using porous mold. *Advanced Composite Materials*, *22*(2), 99-107.