Fuel Processing Technology 126 (2014) 441–452

Contents lists available at ScienceDirect

Fuel Processing Technology

journal homepage: www.elsevier.com/locate/fuproc

Numerical and experimental analysis of pulverized coal mill classifier performance in the Soma B Power Plant

Selçuk Ataş [a,*], Uğur Tekir [b], Mehmed Akif Paksoy [a], Ahmet Çelik [a], Metin Çam [a], Tahsin Sevgel [a]

[a] Energy Institute, TUBITAK Marmara Research Center, 41470 Gebze, Kocaeli, Turkey
[b] Soma Electric Generation Company, R&D Department, 45500 Soma, Manisa, Turkey

ARTICLE INFO

Article history:
Received 20 October 2013
Received in revised form 15 May 2014
Accepted 19 May 2014
Available online xxxx

Keywords:
Classifier performance
Pulverized coal
Coal-fired power plants
CFD

ABSTRACT

Coal particle separation in a classifier after the pulverization process in power plants (PP) is very important to obtain the desired level of coal fineness while reducing unburned carbon losses and slagging potential. In this study, flow inside of the coal mill classifier of Soma B PP suffering from low boiler efficiency due to high unburned carbon loss was numerically analyzed with respect to its initial flow measurements and isokinetic coal samples at the exit of the classifier as a base case. In the numerical analyses, a Eulerian/Lagrangian approach and a Reynolds stress turbulence model (RSTM) were applied. To increase coal separation efficiency, four different designs were numerically analyzed and the results were compared to the results of the base case by accounting for the total mass flow rate to the burners and coal size distribution at the outlet of the classifier. Among them design D-21 was chosen and applied to the PP mill classifier. Finally, this design was tested in a PP with different inner plate adjustments, and there was good agreement between the numerical and experimental results with a maximum difference of 2.5% for the individual coal size distributions and a cumulative maximum difference of 5% for the total coal size distributions. The assumption of a decreasing regrind outlet of coal flow rate by plate adjustment in the classifier for D-21 appears to be sufficient to increase total coal flow rate to the burners. In the tests, operating the mill at lower load conditions resulted in a finer coal size distribution at the outlet.
© 2014 Elsevier B.V. All rights reserved.

1. Introduction

In pulverized coal-fired (PCF) power plants (PPs), coal is pulverized in a mill, and it is then transferred to the burners and furnace volume for combustion. Depending on the physical and chemical properties of the coal, different types of pulverizing systems (e.g., vertical and horizontal air-swept (Fig. 1a and b)) can be used. Horizontal air-swept pulverizers are used to grind and dry low-grade lignite with a high ash and moisture content as well as a low heating value. These types of pulverizing systems are generally used in North America, Germany, Eastern Europe and Turkey [1,2]. After the pulverizer, the separation volume is used to control the size of coal that is fed into the burners. After separation, minimal amount of coarse particles is desired to obtain maximum combustion efficiency. For low rank coal like Turkish lignite, limits in operational experience have indicated that 60–70% of pulverized lignite passes through 200 mesh (74 μm) and 2% is retained on 50 mesh (297 μm). Thus, in the pulverizing process, classification has an important role to provide the desired particle size and increase reactivity of the fuel. Both fine and coarse particles must be controlled within the limits by using these classification techniques. Therefore, careful attention should be given to the design and operation of the classifier [1,2].

A finer coal supplied to the burners allows the coal to burn more rapidly in the furnace by increasing the surface area of the coal particles that react with air. Because the combustion occurs rapidly in the center of the furnace with adequate coal fineness, there is an adequate amount of time for heat to transfer to water in the boiler pipes, which results in a more uniform temperature throughout the boiler. This condition results in a low furnace exit gas temperature, which reduces slagging potential and water consumption due to de-superheating. In addition, the fineness of the coal directly reduces losses by decreasing the amount of unburned carbon in fly and bottom ash [3,4].

Because coal pulverizing and separation are important for PCF PPs, to increase coal fineness with adequate classification, numerous studies have been conducted on pulverizing and separation systems. For example, one experimental and numerical study was performed on a vertical spindle mill. In that study, a spherical object was analyzed in the annulus region at the inlet of the discharge turret to control the flow for coal separation [5]. Other studies have simulated the motion of air and coal particles inside a simplified commercial-scale pulverizer. Those studies observed that 100 μm coal particles qualitatively followed the air streamlines. However, the velocity vectors for 500 μm particles deviated significantly from the flow [6]. Other studies used computational fluid

* Corresponding author. Tel.: +90 262 677 26 05; fax: +90 262 641 23 09.
E-mail address: selcuk.atas@tubitak.gov.tr (S. Ataş).

http://dx.doi.org/10.1016/j.fuproc.2014.05.016
0378-3820/© 2014 Elsevier B.V. All rights reserved.

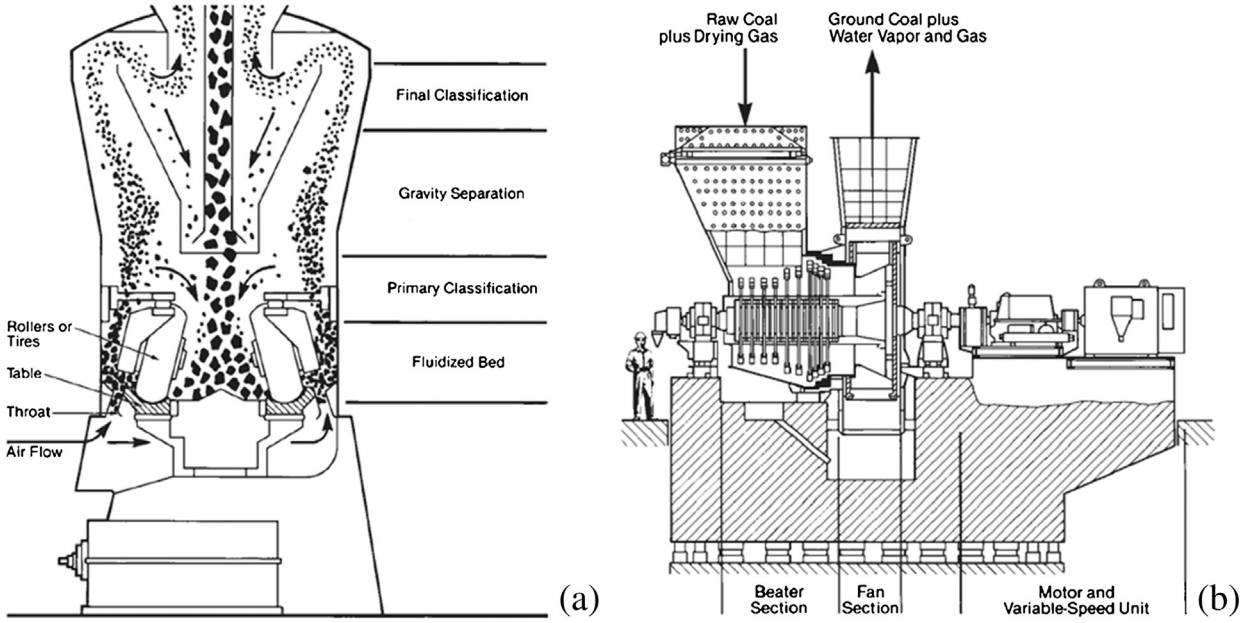

Fig. 1. Pulverization systems: (a) vertical and (b) horizontal air-swept [2].

dynamics (CFD) in a gravitational air classifier for sand separation to understand which parameters controlled the flow field and how those parameters affected the behavior and efficiency of the classification process. The influence of the design and the geometrical parameters of the classifier on the flow field and air classification performance was also simulated and evaluated using CFD. Some CFD simulations indicated that the inlet and the recirculation chamber should be designed such that the air flows with the primary air flow as much as possible [7]. Additional studies have performed numerical simulations of a typical pulverized coal-based vertical air-swept pulverizer and used different classifier vane settings to evaluate the uniform flow rate and desired size fraction at the outlet pipes along with high classifier efficiency. The optimal opening for the vanes was determined based on the adjustments, which not only reduces unburned CO, SO and NO emissions at the end of the boiler but also minimizes energy consumption of the mill (in terms of reducing the regrinding cost). From the numerical studies, the optimal opening for the vanes was determined to be 65% for a selected utility, which resulted in the closest uniformity with 60% classifying efficiency in which 70% of the particles pass through a 75-micron sieve [8]. Other studies have been conducted based on extensive experimental tests and simulations of the performance in a cross-flow air classifier. Those studies determined the reason for poor performance of the classifier and generated computational results that yielded insight into the underlying mechanisms. Additional studies have been conducted to improve the performance of the classifier [9]. In one such study, researchers experimentally and numerically characterized the strong swirling fluid motions that are responsible for particle separation and transport in a coal pulverizing mill. Measurements of the swirl velocity component were made in a laboratory-scale model of the device and were compared to the results from a CFD model. The results of that study gave some insight into single-phase classifier flow, and a design improvement was suggested based on the results [10]. Additionally, some studies have been conducted on pulverizer improvements to meet the demands of low-NOx combustion systems [11].

As described in previous research [3–12], coal separation after the pulverization process is important for a PCF PP because low-quality separation delivers more coarse coal particles to the burners and results in primarily increased unburned carbon loss. Additionally, coarse coal particles result in an increase in the slagging potential in the furnace due to high furnace exit gas temperature. Previous studies generally focused on separation for vertical air swept pulverizer performance. There are no studies on the incremental improvement in the performance of horizontal air swept pulverizer classifier systems used in PCF PPs. Therefore, in this study, parametric geometrical changes in the coal separation of the horizontal air-swept pulverizer are numerically analyzed by using CFD simulations to understand solid-air flow structures inside the separation system. Then, an improvement to the geometry is determined with respect to the coal grinding quality and the flow rate of coal to the burner. Finally, the modified geometry is applied to one of the pulverizer classifiers in the Soma B PP, and performance tests are conducted to determine the classification efficiency and validate the numerical analysis.

2. Description of the classifier for the PP pulverizer

The Soma B PP contains a total of six units, each with an electrical capacity of 165 MWe. Each unit utilizes a lignite-fired boiler with 6 horizontal air-swept pulverizers with beaters. After the pulverizer, there is a classifier volume that separates and redirects coarse particles for further pulverization to the mill and transports fine particles to the burner. The specifications of the pulverizer are shown in Table 1.

The operation of the mill-classifier system (Fig. 2) that was considered in this study is described in the following steps: the coal enters the pulverizer with 925 °C gas (1) withdrawn from the boiler. Then,

Table 1
PP pulverizer properties.

Pulverizer type	Horizontal air swept with beater and fan	
Number of pulverizers	6 total (5 main + 1 spare)	
Maximum coal capacity	37	[ton h^{-1}]
Coal pulverization rate less than 1000 μm	97–98	[%]
Coal pulverization rate less than 90 μm	50	[%]
Coal gas temperature after pulverizer	140	[°C]
Coal gas operation temperature after pulverizer	100–180	[°C]
Pulverizer outlet trip temperature	≥220	[°C]
Pulverizer operation speed	450–650	[rpm]
Gas volumetric flow rate	25	[m^3 s^{-1}]
Maximum pulverizer fan speed	90	[m/s]
Extracted drying gas temperature for coal	925	[°C]

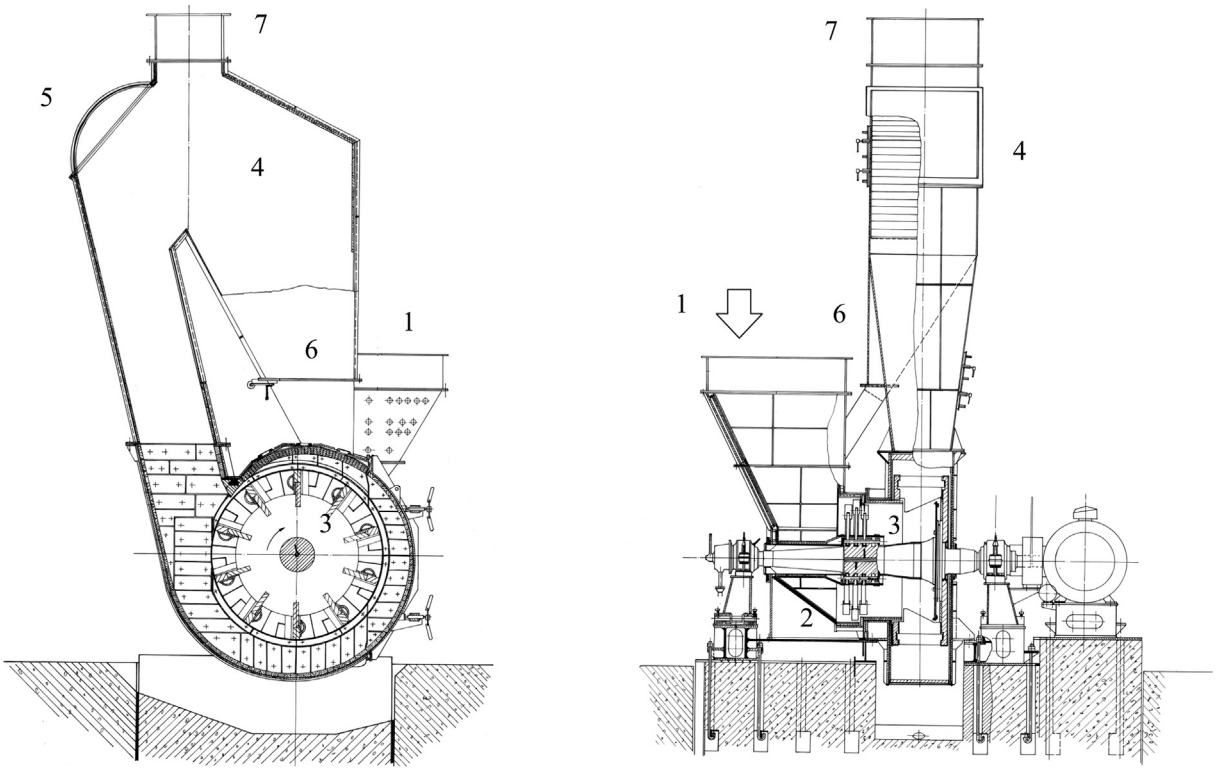

Fig. 2. Soma B PP pulverizer and coal flow diagram.

the beater hammers (2) break the coal into smaller pieces, and the coal drying process begins. Broken and partially pulverized coal passes through the fan (3), and the fan blades exert force that causes the coal to collide with the surfaces of the stator and rotor. During this process, the coal particles become smaller due to attrition and collisional forces. Then, the pulverized coal particles move into the classifier volume (4). In the classifier volume, the gas and coal particle mixture exits the pulverizer at a velocity of approximately 30–35 m/s. This high speed forces the coal particles to the radial region of the classifier (5). However, not all of the particles follow this process. The coarse particles first collide with the radial surface of the classifier and lose some kinetic energy. If the coarse particles lose enough energy due to the collision, then the large and heavy coal particles move downward and turn back towards the mill for further pulverization from the return outlet of the pulverizer (6). On the other hand, the small, fine coal particles at 100–180 °C follow the flow stream to the burner ducts (7) without colliding with the classifier surface because they are small enough to follow the flow stream. Therefore, the separation efficiency of the classifier is a function of the construction and flow characteristics inside the classifier volume.

However, the separation volume after pulverization is not modular in Soma B PP. It is a gravitational type classifier and there is not any component to modify the separation behavior. As operational conditions are dynamic in PPs due to variable fuel characteristics and different fuel loads, the inlet conditions change during the operation of classifiers as well. Operators have no means in the classifier volume to eliminate these shortcomings coming from dynamic operational conditions. As a future design, the operators should adjust the flow and construction parameters inside the classifier with respect to fuel and load characteristic. This study also will give an insight to designers for this kind of modular classifiers.

3. Numerical analysis

In the numerical CFD simulations, the geometry and grid generation was modeled by using the pre-processor GAMBIT, and the flow simulations were performed using FLUENT 6.26. In the classifier volume, a pulverized coal particle follows the path of the flow stream if the gravitational force acting on the particle is not dominated by the drag force due to gas flow. Because the amount of particles in the gas volume is less than 10%, this flow is considered to be a dilute mixture [13]. Additionally, it is assumed that particle-to-particle interaction does not occur and does not affect the flow inside. Therefore, particle–particle collisions were neglected in this study. This assumption is reasonable for dilute gas–particle flows. This assumption eliminates the possibility of fine particles returning to the pulverizer and assumes that the fine particles follow the stream similarly to coarse particles due to the turbulence and particle interaction disruption inside the classifier volume. In the numerical analysis, an Eulerian/Lagrangian approach is used due to the low solid–gas volume ratio. First, the Euler region is solved and the particles are tracked using a Lagrangian approach. The gas-phase fluid flow from the pulverizer is high-speed, turbulent flow, and the fluid is assumed to be viscous and incompressible. The Reynolds-Averaged Navier–Stokes (RANS) and continuity equations were solved for gas fluid flow. The particle flow was solved using a discrete-phase model (DPM). A DPM is valid because the solid-volume ratio is less than 10% [3]. In the numerical control volume, velocities of particles (v_p) are obtained by the equation [14]:

$$\frac{dv_p}{dt} = F_A\left(v_g - v_p\right) + g$$

where g is the gravitational acceleration, t is the time and initial velocities of particles assumed to be equal to gas velocity (v_g).

$$v_p(0) = v_g(0)$$

$F_A(v_g - v_p)$ is the drag force exerted on unit mass.

$$F_A = \frac{3}{4}\frac{\mu}{\rho_p d_p^2} C_D \mathrm{Re}$$

Here d_p, ρ_p and C_D are the diameter, density and drag coefficient of the coal particle respectively, μ is the gas viscosity and Re is the Reynolds number relative to the particle. Locations of coal particles (x_p) in the numerical control volume are obtained by the equation:

$$\frac{dx_p}{dt} = v_p.$$

Regarding the turbulence model, various studies have obtained different results. For example, in one study, a realizable $k-\varepsilon$ turbulence model was used to obtain reasonable results, especially for the gas flow inside a coal duct [12]. Other studies used the standard $k-\varepsilon$ turbulence model while studying a gravitational air classifier [6]. Another study calculated the flow inside of the vertical spindle mill. In that study, three different turbulence models were used, the Reynolds stress transport model (RSTM), standard $k-\varepsilon$ model and renormalization group (RNG) model. The results of that study demonstrated that all three turbulence models calculated good approximations for the tangential velocity components. However, only the RSTM reasonably approximated the radial distribution of the axial velocity component. Thus, even though the RSTM method is computationally expensive, it was used in this study to obtain more accurate results [4]. Other studies obtained similar results compared to the $k-\varepsilon$ models and RSTM [9]. In that study, the $k-\varepsilon$ model was also used to compare to the RSTM method, but the results indicate that RSTM has higher convergence and yields more stable results.

In the numerical simulation, the model was divided into six volumes, and structured grids were applied to these volumes (except for volume 3, which used semi-structured grids) (Fig. 2). Before the primary simulations were conducted, different mesh sizes and grid cell counts were tested in a base case, and, according to the flow characteristics (velocity and pressure distribution) inside the classifier volume, approximately 1,000,000 cells were adequate to obtain grid independent results. After determining the approximate number of grid cells in the base case model, the number of grid cells was varied according to the classifier geometrical modifications in the analyses. However, all of the simulations were conducted with approximately the same grid structure and number of grid cells (approximately 1,000,000–1,900,000 grid cells) to maintain grid independence (Fig. 3).

Table 2
Numerical analysis constants.

Gas density	0.815	[kg m^{-3}]
Gas viscosity	2.42e−05	[kg m^{-1} s^{-1}]
Gas temperature	180	[°C]
Inlet velocity	35	[m/s]
Outlet pressure	0	[Pa]
Particle density	1000	[kg m^{-3}]
Restitution coefficient (normal)	0.5	–
Restitution coefficient (tangent)	0.9	–

Some of the properties and boundary conditions that were used in the simulation are shown in Table 2. The gas temperature inside the classifier was 180 °C, and the corresponding density and viscosity of the gas were used. The inlet boundary was specified as a velocity inlet condition with a value of 35 m/s. Another important input parameter for the inlet boundary is the total coal flow rate, which was specified as 16.3 kg/s, and the coal size distribution is shown in Table 3. For the two outlets leading to the burners for combustion and the pulverizer for regrinding, a pressure outlet was used with a value of atmospheric pressure. The boundary conditions and coal size distribution were determined from experimental and numerical methods, and more details are given in later sections for each base case.

In the simulations, particle–wall collisions were modeled using a coefficient of restitution, which is the ratio of the normal velocity component before and after a collision. Some studies reduced momentum parallel and perpendicular to the wall by using constant restitution numbers of 1.0 and 0.9, respectively [12]. Other studies used a value of 0.9 for restitution coefficients [4]. However, some experimental studies reported that the collision angle affects the value of the restitution coefficient. For example, one study reported that if the collision angle was close to zero (nearly parallel to surface), then the restitution coefficient was approximately 0.95 for a 100-micron glass bead colliding with a steel surface [15]. If the collision angle was increased to 30°, then the restitution coefficient was 0.7. To investigate the characteristics of coal particle collisions on steel surface, some sensitivity analyses have been performed, and the results indicated that a normal coefficient of restitution in the range of 0.3 and 0.7 did not significantly change the results.

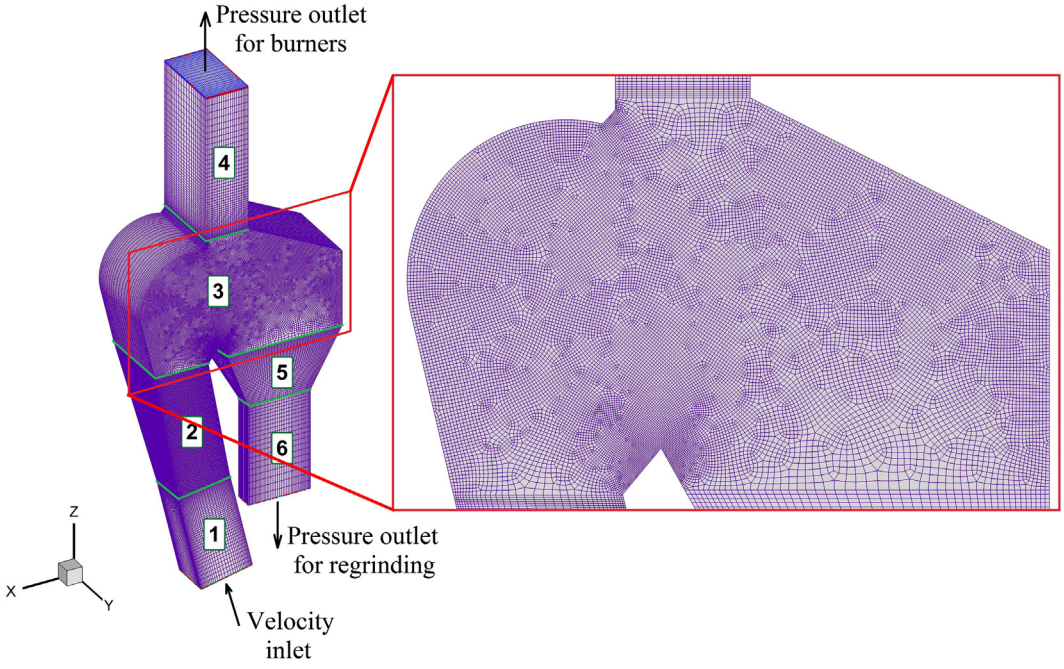

Fig. 3. Numerical analysis control volume and boundary conditions used in the simulation domain.

Table 3
Results of coal sample sieve analysis for base case analysis.

Sieve mesh size (μm)	Coal size-passing sieve (%)
1.12	1.06
500	4.89
315	7.94
140	20.66
100	10.45
90	2.93
71	6.06
Receiver	44.87
Total	100.00

Table 4
Inlet coal flow rate with size distribution.

Coal particle sizes (μm)	Net weight (kg/s)
1550	0.570
990	0.448
680	1.468
410	1.196
230	2.487
120	1.436
95	0.415
80	0.902
60	3.832
35	1.595
15	1.681
Total	16.3

Therefore, in this study, the normal and tangential restitution coefficients were specified as 0.5 and 0.9, respectively.

No-slip boundary conditions and the standard wall function were used at the near-wall flow regions by using the turbulent wall y+. This assumption eliminated the need for very fine grids in the near-wall region.

4. Results and discussion

4.1. Base case analysis

Base case (D-00) analysis is an analysis with the model in its original operational case and construction. In the base case, there is no plate inside the classifier to divert the coal for better separation performance. This goal of this analysis is to determine adequate boundary conditions (velocities and coal particle distribution at the inlet) for further CFD analysis. Additionally, in the base case analysis, the turbulence model that was used was selected by comparing the k − ε and RSTM turbulence models. Finally, different coefficients of restitution were selected based on the results of the base case.

In CFD analyses, boundary conditions are among the most important input parameters. However, because this study was conducted with the Soma B PP (electrical capacity of 165 MWe) and the mill-classifier system in an actual power plant involves complex systems, the methods and locations to obtain measurements for boundary conditions were limited. In this study, ducts A and B at the outlet of the classifier (Fig. 4a–c) were chosen for the measurements, and four ports were opened on each duct. Each port contained thirteen measurement points to obtain boundary conditions that represent the duct (Fig. 4b and c).

In ducts A and B, the total pressure, static pressure and gas temperature were measured, and pulverized coal samples were obtained at these measurement points. 10 s of coal sampling at each grid point was applied at isokinetic conditions that were specified as the measured static pressure, total pressure and temperature. Then, the coal samples were analyzed in a vibratory sieving machine with an amplitude of 85 at 15 min, and the coal size distribution results were obtained and were shown in Table 3.

By using the measured parameters and gas temperatures, the density and dynamic pressure of the gas were calculated. The velocities at each measurement point were calculated using a measuring probe constant of 0.96. According to results of these measurements and calculations, the outlet operation conditions were determined such that the pulverized coal mass flow rate to the burners was approximately 10.0 kg/s and the average velocity for the measurement points was 22.2 m/s. However, no data were available for the classifier inlet because it was not safe or possible to obtain gas velocity measurements at this location. Meanwhile, it was difficult to obtain coal samples near the mill because there was a large number of coarse coal particles and the speed of the particles was very high. According to the analysis of the base case, the velocity inlet boundary condition at the inlet of the classifier was determined by varying the inlet velocity until the velocity results that were calculated at the outlet of the classifier were obtained. To reduce the

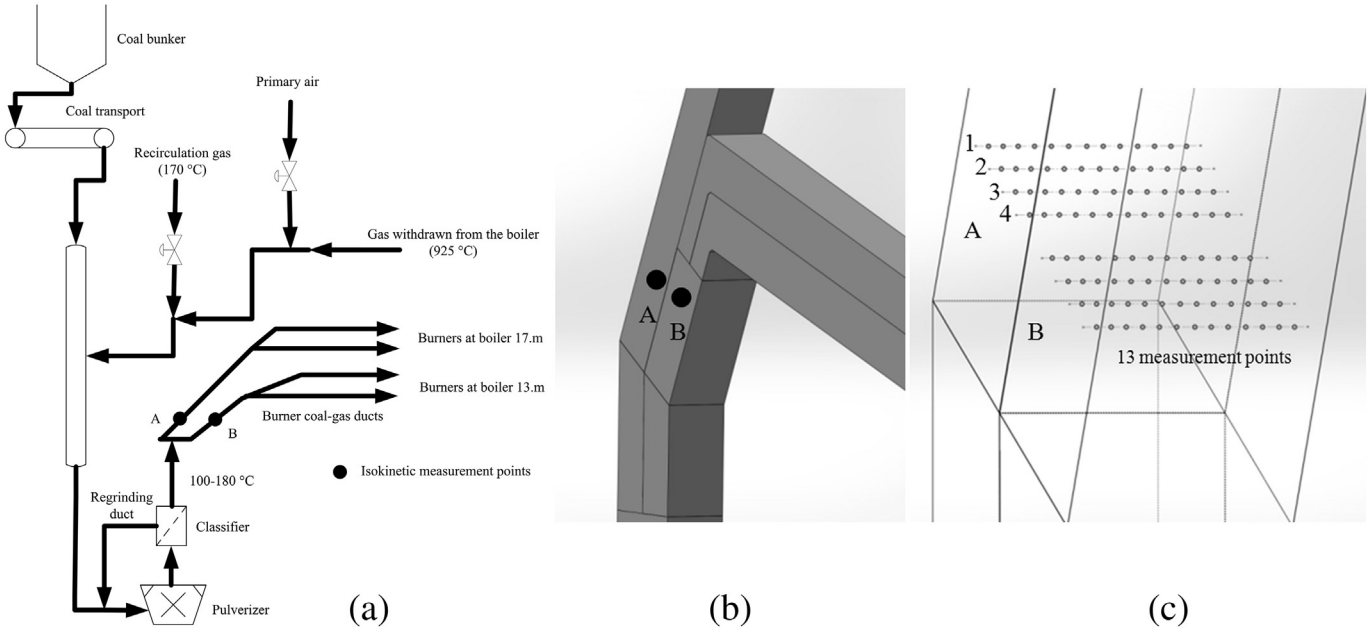

Fig. 4. Pulverizer (a) flow diagram (b) measurement ducts and (c) points.

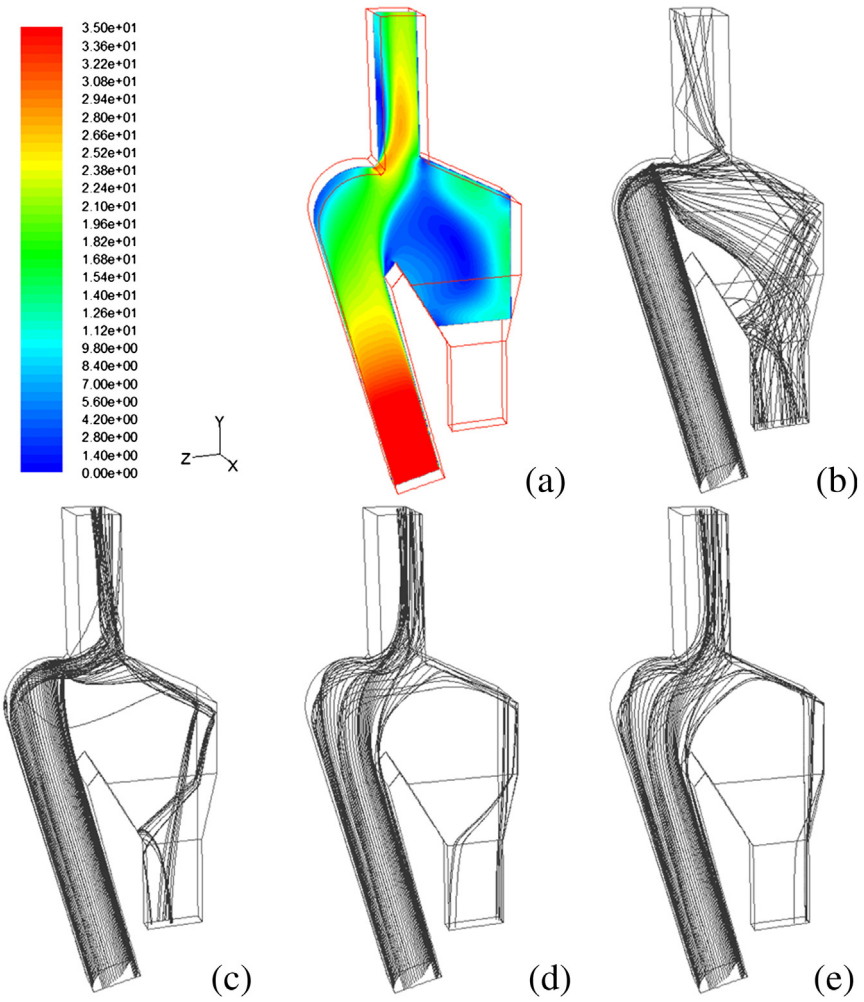

Fig. 5. Base case (a) velocity (m/s) profile at the mid-plane and motion of coal particles for (b) 1550, (c) 230, (d) 120 and (e) 80 μm.

number of trials that were required to determine the inlet velocity, mass conservation analysis was used at the control volume, which resulted in a rough estimation of 40 m/s. Therefore, the inlet velocity boundary condition should be specified as approximately 35 m/s to obtain an average measured velocity profile of 22.2 m/s at the outlet of the classifier (ducts A and B). After determining the inlet velocity boundary condition for the classifier control volume, the size distribution of pulverized coal at the inlet should be determined to meet the coal particle size distribution at the outlet (Table 3). Eleven different injection sizes were defined for coal particles at the outlet, and particles

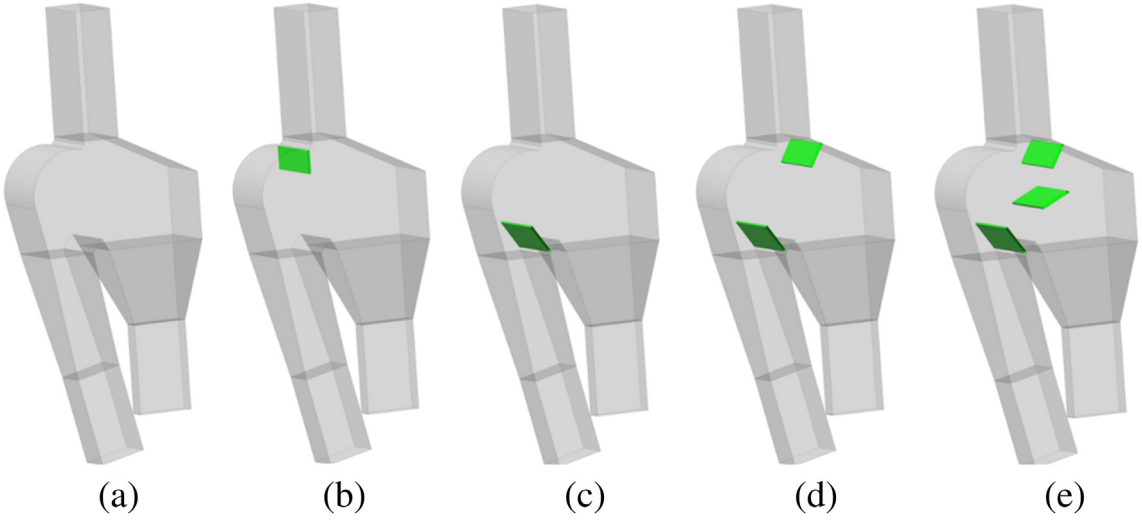

Fig. 6. Design alternatives a) D-00 b) D-02 c) D-15 d) D-20 and e) D-21.

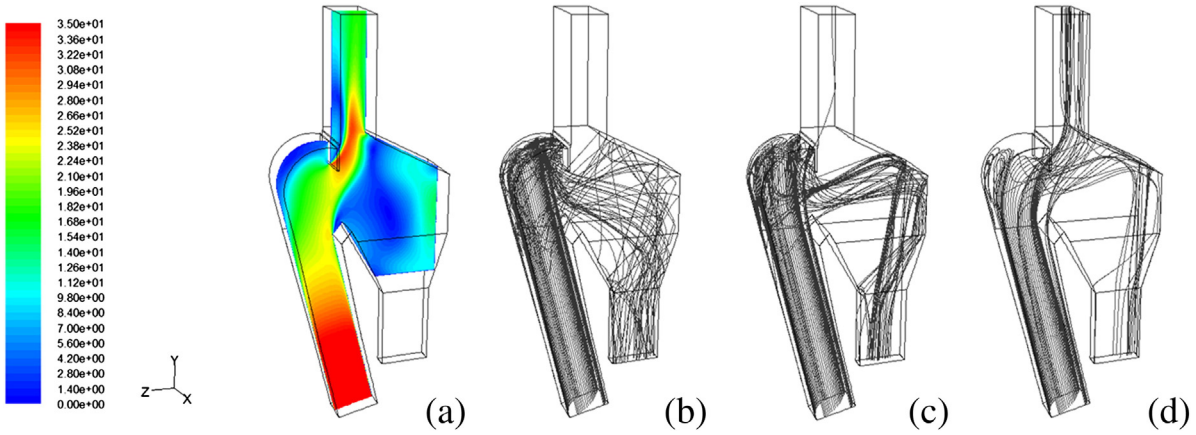

Fig. 7. D-02 (a) velocity (m/s) profile at the mid-plane and motion of coal particles for (b) 1550, (c) 230 and (d) 120 μm.

larger than 1550 μm were assumed to be negligible. The mass flow rate of each of the eleven injection sizes was varied until the value at the outlet was in agreement with the experimental data shown in Table 3 by controlling and obtaining a total mass flow rate of 10.0 kg/s measured outlet. From this analysis, a total mass flow rate of 16.3 kg/s from the pulverizer was determined, and the distribution of the inlet coal particles for the classifier was obtained (Table 4).

The base case CFD analysis indicated that the gas flowing through the classifier volume changed direction towards the boiler outlet (Fig. 5a). The increased momentum of the larger particles caused them to be removed from the primary flow, and the larger particles flowed on a nearly straight path, collided with the curved portion of the classifier and bounced back towards the direction of gas flow (Fig. 5b and c). If the particles were large enough, then they were mostly redirected back towards the regrinding duct (Fig. 5b). If the particles were small enough, then they followed the primary gas stream and mostly traveled towards the burners (Fig. 5d and e).

4.2. Analyses for new designs

After exploring boundary conditions based on the results of the base case analyses (D-00), new designs were developed and numerically analyzed according to predefined performance criteria. The performance targets for the new designs are described as follows.

The performance criteria for this study included the coal mass flow rate to the burner and the coal size distribution after the classifier. The mass flow rate to the burners is important to maintain the correct mass balance in the mill and the boiler. According to the base case analysis, if the mass flow rate from the mill is less than 10 kg/s, then the mill can become overloaded, and some of the coal will return for regrinding. After some time, because the coal is feeding into the pulverizer at a constant rate, the coal will accumulate in the mill, and the power consumption of the mill will increase to a limit that the mill cannot handle. Additionally, the load on the mill will have to decrease along with a reduction of the power produced by the PP. The boiler will not produce the desired amount of power due to a reduced coal mass flow rate to the burners even if the combustion efficiency is high with adequate pulverized coal size at the reduced mill load. Therefore, for the performance criteria, the coal mass flow rates to the burners from the mill in the new design analyses are calculated as follows, where i indicates different sizes of the coal particles.

$$m_{burner,t} = \sum_{i=0}^{n} m_{burner,i}$$

$m_{burner,t}$ total coal mass flow to the burner after the classifier.
$m_{burner,i}$ coal mass flow for each different particle size to the burner after the classifier.

In addition to the coal mass flow rate to the burners, the classifier separation efficiency is another aspect that can improve the performance of the classifier. For the Soma B PP, there are two conditions for classifier performance: 1) 50% of the pulverized coal from the mill to the burners

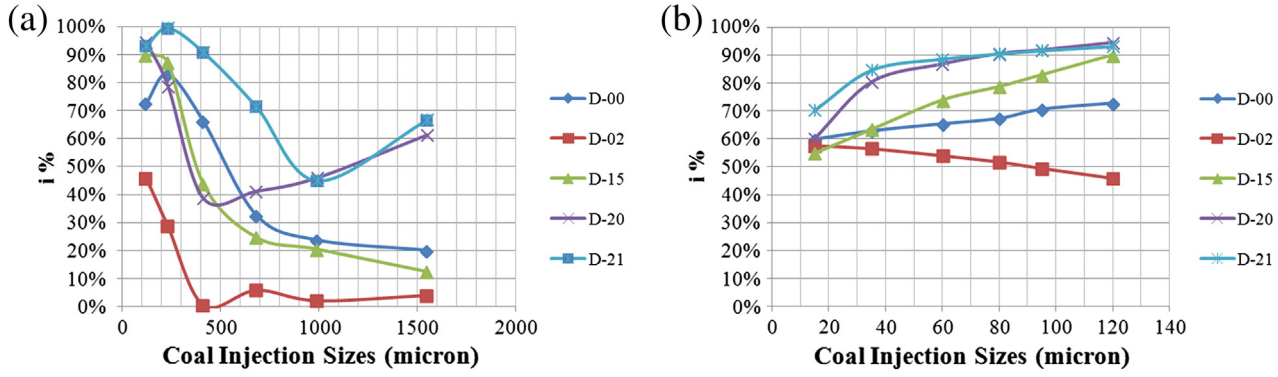

Fig. 8. Separation efficiency a) for coal size ≥120 μm and b) for coal size ≤120 μm.

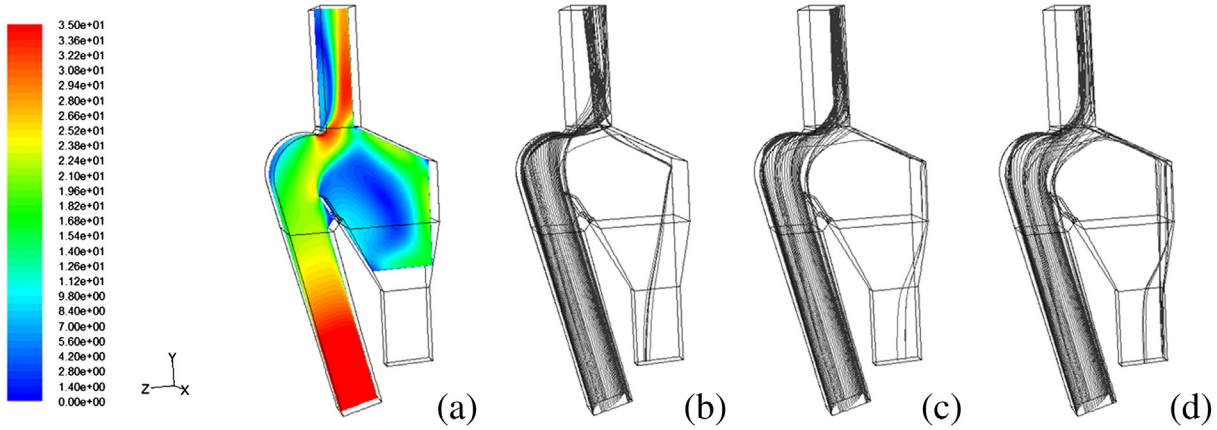

Fig. 9. D-15 (a) velocity (m/s) profile at the mid-plane and motion of coal particles for (b) 230, (c) 120 and (d) 80 μm.

must be less than 90 μm, and 2) 98% of the pulverized coal must be less than 1000 μm.

$$i\% = \frac{m_{burner,i}}{m_{burner,t}}$$

$$i\%_{<90} = \sum_{i=0}^{90} m_{burner,i}/m_{burner,t} > 50\%$$

$$i\%_{<1,000} = \sum_{i=0}^{1,000} m_{burner,i}/m_{burner,t} > 98\%$$

$i\%$ separation efficiency for different coal sizes.
$i\%_{<90}$ separation efficiency for coal sizes less than 90 μm.
$i\%_{<1000}$ separation efficiency for coal sizes less than 1000 μm.

Moreover, in previous studies, efficiency is defined as the ratio of coal mass flow rate to the burner to the total mass flow rate from the mill [5]. This ratio should be large for fine particles (less than 150 μm) and small for coarse particles (above 150 μm) [3] as coarse particles larger than 100 mesh (150 μm) are the primary cause of unburned carbon loss. As before, i indicates different sizes of the coal particles.

$$\eta_{sep,i} = \frac{m_{burner,i}}{m_{mill,i}}$$

$\eta_{sep,i}$ efficiency of coal separation for particle size i.
$m_{mill,i}$ mass flow rate of coal from the mill for coal particle size i.

Table 5
Coal size distribution at the outlet of the mill.

Design no	Mass flow rate kg/s		Distribution %	
	<90 μm	<1000 μm	<90 μm	<1000 μm
D-00	5.11	9.89	51.1%	98.9%
D-02	4.41	6.09	72.2%	99.6%
D-15	5.47	10.26	53.0%	99.3%
D-20	6.44	11.41	54.8%	97.0%
D-21	6.75	13.28	49.4%	97.2%

As a result, for the new design analyses, certain steps are going to be checked and controlled. These steps are as follows:

- The coal mass flow rate from the mill should be approximately 10.0 kg/s, as in the D-00 base case.
- For the coal size distribution to the burner after the classifier:
  - o 50% of pulverized coal should be smaller than 90 μm.
  - o 98% of pulverized coal should be smaller than 1000 μm.

With respect to these controlling parameters, more than twenty designs were developed, and some aspects of the designs were used in the final design and are presented in this study. The designs are expressed using their original names (D-02, D-15, D-20, and D-21) and are shown in Fig. 6.

Base case (D-00) simulation showed that mass flow rate of particles finer than 90 μm is 8.01 kg/s at the inlet. If it could be possible to direct all particles finer than 90 μm and about 2 kg/s coarser particles to burners more than 80% of the pulverized coal will be smaller than 90 μm while the first criterion which is 10 kg/s coal flow rate to the burners is also satisfied. Also if it could be possible to separate all particles with 1550 μm diameter the second criterion of the separation will be satisfied with 100% of pulverized coal being finer than 1000 μm. In new designs motivation was to reach these theoretical limits.

Design D-02 contains a single short plate that is placed on the left side of the outlet (Fig. 6b). In the base case analysis, coarse particles larger than 410 μm reached the curved portion of the classifier. Additionally, coal particles smaller than 410 μm were partially following the gas flow inside the classifier. However, some coarse particles were bouncing back and being carried away by the primary high-velocity gas stream to the burner (Fig. 5b). This behavior is not desired because coarse coal particles decrease the combustion efficiency in a PP. To decrease this percentage for coarse particles, the goal of the plate used in the D-02 classifier design was to stop the coarse particles from being carried by primary gas flow stream (Fig. 7a–d).

The results were compared to the base case analysis, and the predictions are in good agreement with the assumptions that were made. Using this classifier, the coal was fed into the boiler with a separation efficiency of 72.2% for particles less than 90 μm and 99.6% for particles less than 1000 μm. These results are very reasonable and result in adequate combustion inside the boiler. The finer coal fed into the boiler results in more rapid and complete combustion. Additionally, there is a minimal loss of ignition in both the fly ash and the bottom ash. The classification efficiency is also shown in Fig. 8 such that the plate inside the classifier for D-02 resulted in the lowest separation efficiencies for all coal particle sizes. Therefore, the coal mass flow rate was severely reduced (by 39%) to 6.1 kg/s because the plate inside the classifier diverted most of the coal to the regrinding duct (6). As a result of this design, placing a plate at this location increased the total classification

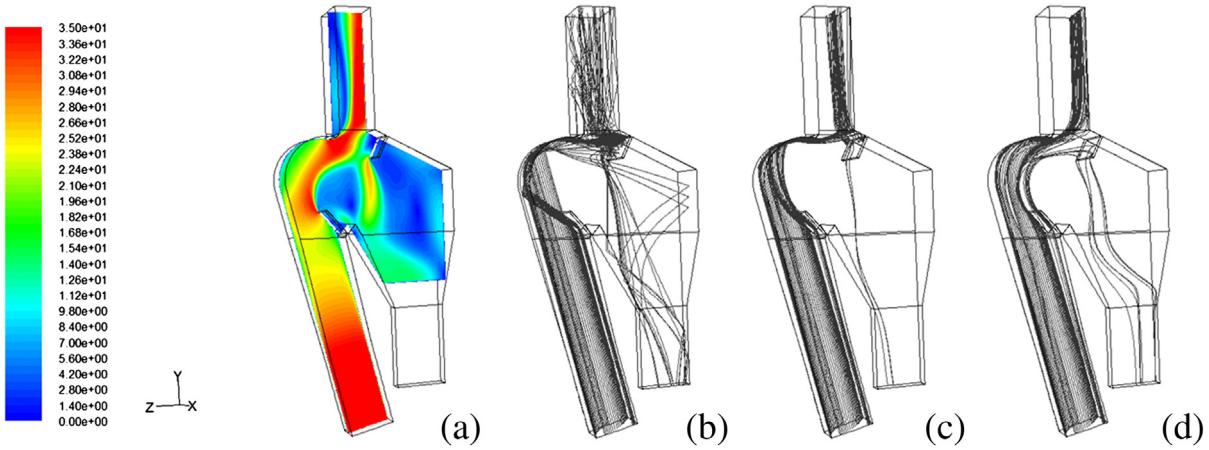

Fig. 10. D-20 (a) velocity (m/s) profile at the mid-plane and motion of coal particles for (b) 1550, (c) 230 and (d) 80 μm.

efficiency by minimizing coarse coal separation, but this design also significantly decreased the coal mass flow rate.

Design D-15 contains a plate on the right side of the classifier inlet (Fig. 6c). One method to increase the separation efficiency is to increase the change in direction of the air. The goal of using this plate was to delay the gas flow stream direction towards the classifier outlet. The results indicate that the velocity at the inlet of the classifier increased due to the reduction of the throat area by the plate (Fig. 9a). Because of the increased velocity, finer particles reached the curved portion of the classifier (Fig. 9b–d). As the gas flow stream was delayed, the fine particle lower limit that reached the curved portion of the classifier decreased, these particles were not completed transported by the primary gas stream at the inlet, and the classification was occurring more efficiently.

As particles larger than 230 μm were reaching the curved portion (410 μm for base case), coal particles smaller than 120 μm started to be dominated by the primary gas flow stream. Additionally, the results in Table 5 indicate that the classification efficiency for D-15 had better values for coal particles less than 120 μm, and, for finer coal particles, the separation was improved when compared to D-00 and D-15. Therefore, D-15 yielded improved results for both the classification efficiency and the coal mass flow rate at the outlet. As a result, a separation efficiency of 53.0% was attained for 90-micron particles, and the coal mass flow rate to the boiler was calculated as 10.3 kg/s. Additionally, the design condition for 1000 μm was also satisfied with an efficiency of 99.3%.

Design D-20 was an improved version of D-15 in which another plate was located at the right side of the outlet, and this plate decreased the gas flow rate and the coal flow rate to the regrinder outlet (Fig. 10). D-20 had coal separation efficiencies of 54.8% and 97.0% for coal particles smaller than 90 μm and 1000 μm, respectively, and the coal flow rate was 11.7 kg/s (Tables 5 and 6). Another consideration of this design was to capture large particles that bounce with an angle from the curved portion of the classifier. Both partly the plate located at the outlet and partly the gas flow to the outlet can carry these particles into the burner duct. Therefore, the goal of the plate at the outlet of the classifier was to divert some of the coal particles towards the outlet (Fig. 6d). As a result, the mass flow rate increased by 17% compared to mass flow rate in the base case.

Regarding the classification efficiency for particle sizes less than 120 μm, D-20 had a higher efficiency compared to designs D-00, D-02 and D-15 (Fig. 7). However, the classification efficiency increased for coal particles larger than 120 μm, which is not desired because this behavior decreases the overall pulverized total coal surface area. As the pulverized coal surface area decreased, the combustion was not complete, which resulted in unburned carbon loss and increased the potential for slagging in the furnace. The plate at the outlet also increased the flow rate of coarser coal particles to the boiler, which is reflected in the increase in the total mass to the burners.

Analyses with D-20 yielded good results for both the coal separation efficiency and the coal mass flow rate. However, to further increase the mass flow rate, another plate was placed in the middle of the classifier volume (Fig. 6e) and analyzed (D-21). According to the separation comparison for coal particles larger than 120 μm, larger values were obtained because the plates located at the outlet and the middle diverted the coal particles moving towards the regrinding duct to the outlet of the classifier (Fig. 11). As expected from the assumption for D-21, the mass flow rate to the boiler increased to 13.6 kg/s with an increase of 36% with respect to the base case. Additionally, the separation efficiency for coal particles larger than 120 μm was as high as the result for D-20. The separation efficiencies were obtained as 49.4% and 97.2% for 90-micron and 1000-micron coal particles, respectively (Tables 5 and 6).

As a result of the design analyses for D-02, D-15, D-201 and D-21, according to the control parameters coal mass flow rate to the boiler and coal separation efficiencies, design D-20 yielded better values. However, to test different plate conditions for the classifier in the Soma B PP, design D-21 was applied to the classifier. These plates were designed such that the plate position could be changed by rotating the plates from their joints on the classifier.

4.3. Numerical validations and experiments with new design D-21

After three adjustable plates were placed in the classifier according to D-21, some tests were conducted, and in these tests, the coal after passing through the classifier was sampled in isokinetic conditions as it was at the initial measurements. The plate positions that were used in the tests are shown in Table 7.

At the beginning of the test evaluations, the results of the CFD analyses were compared to the test results by evaluating the rate of the coal sizes at the outlet of the classifier. The results indicate that the measured and predicted coal diameter distributions are in good agreement and yield good results with a maximum difference of 2.5% (Fig. 12a). Additionally, the coal rates below the defined sieve size were compared. These results clearly indicate that the CFD model yielded very reasonable results for

Table 6
Coal mass flow rate to the burner after classifier for designs.

Design name	$m_{burner,t}$ (kg/s)	Deviation
D-00	10.0	Base
D-02	6.1	−39%
D-15	10.3	+3%
D-20	11.7	+17%
D-21	13.6	+36%

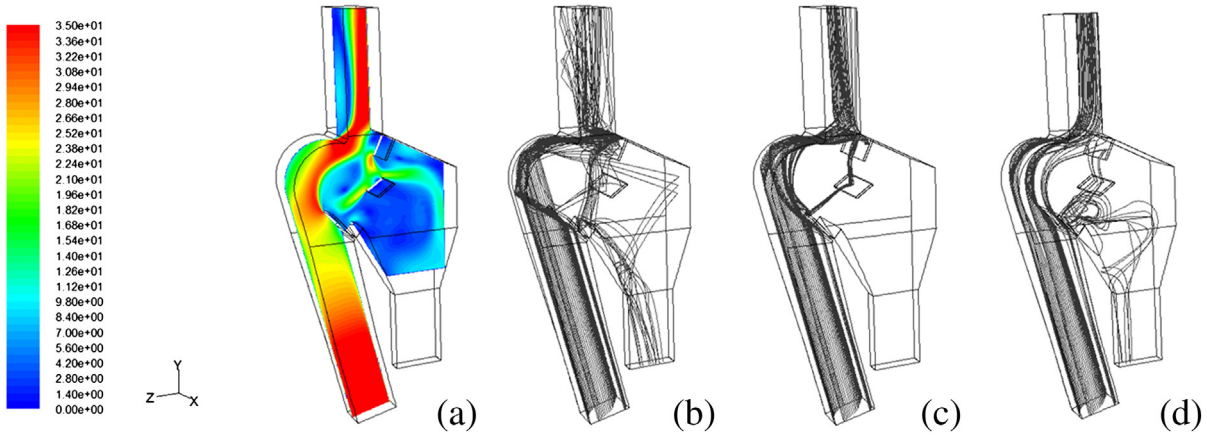

Fig. 11. D-21 (a) velocity (m/s) profile at the mid-plane and motion of coal particles for (b) 1550, (c) 230 and (d) 80 μm.

coal particles between the sizes of 0 to 100 μm and 800 to 1000 μm. The maximum difference between the measured and predicted values was 5% (for 200 μm) (Fig. 12b). The numerical results were validated by comparing them to experimental measurements at the PP.

After validating the CFD analysis results in the above tests, a set of tests was performed to tune the plate angles. In these tests, the load on the mill was 95%. The properties of the coal were specified as follows: a higher heating value of 2130 kcal/kg, a lower heating value of 1929 kcal/kg, a moisture content of 14.3% and ash content of 40.3%. Model tuning was performed by accounting for the coal rates less than 90 μm and 1000 μm conditions at the outlet. Additionally, the surface area for the pulverized coal was calculated for a 100-gram coal sample. The surface area of the pulverized coal is important for complete combustion efficiency and unburned carbon. A larger surface area results in more complete combustion and minimal unburned carbon loss in the fly ash and bottom ash. According to these parameters, tests E95 01 and E80 04 had comparable results with respect to the coal size distribution and surface area (Table 8). While the coal size less than 90 μm in E95 01 was higher, the total surface area of the pulverized coal was 1.3% higher for E80 04. When the mill load effect was examined, the results indicate that the separation quality for coal size less than 90 μm and the total pulverized coal surface area were improved (E95 02 and E80 02).

Table 7
Plate positions in the classifier for tuning experiments.

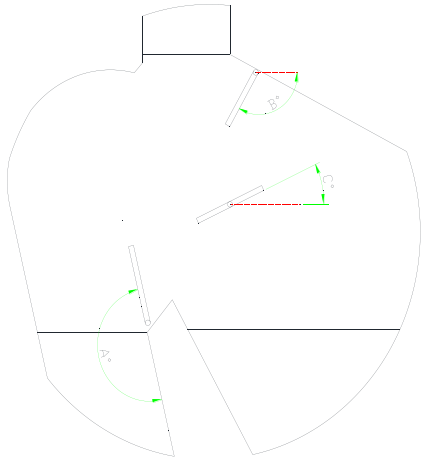

Test no	A °	B °	C °
01	165	100	40
02	165	60	105
03	165	27	40
04	140	117	40
05	140	117	105
06	140	60	105

5. Conclusion

Coal particle separation in the classifier after the pulverization process in power plants (PPs) is important to obtain the desired level of coal fineness while reducing unburned carbon losses and slagging potential. A finer coal supplied to the burners allows the coal to burn more rapidly in the furnace by increasing the surface area of the coal particles that reacts with air. Because the combustion occurs rapidly in the center of the furnace with adequate coal fineness, there is an adequate amount of time for heat to transfer to water in the boiler pipes, which results in a more uniform temperature along the boiler. This results in lower furnace exit gas temperature, so reduces slagging potential and water consumption due to de-superheating. In addition, the fineness of the coal directly reduces losses by decreasing the amount of unburned carbon in fly and bottom ash.

Flow in the classifier systems of an actual PP is complex and is not yet fully understood. Additionally, it is difficult to obtain experimental data for coal samples and measure mass flows rates at isokinetic conditions. To understand the flow inside of a coal mill and modify its construction to increase its separation efficiency, the Soma B PP classifier was numerically modeled and analyzed with respect to its initial measurements and isokinetic coal samples at the exit of the classifier. In the numerical analyses:

- An Eulerian/Lagrangian approach was used due to the low solid–gas volume ratio.
- The RSTM turbulence model was applied for its accurate prediction of the axial velocity components.
- The normal and tangential restitution coefficients were specified as 0.5 and 0.9, respectively.
- To eliminate the necessity of extremely fine grids in near wall regions, no-slip boundary conditions and the standard wall function were used at the wall.

The inlet coal distribution according to the coal particle size and inlet gas velocity for the classifier were determined by using numerical analyses with some trials and utilized isokinetic coal sampling, sieving and pressure data that were obtained in the measurements.

Four different designs (D-02, 15, 20 and 21) were analyzed, and the results were compared to the results from the base case (D-00). When

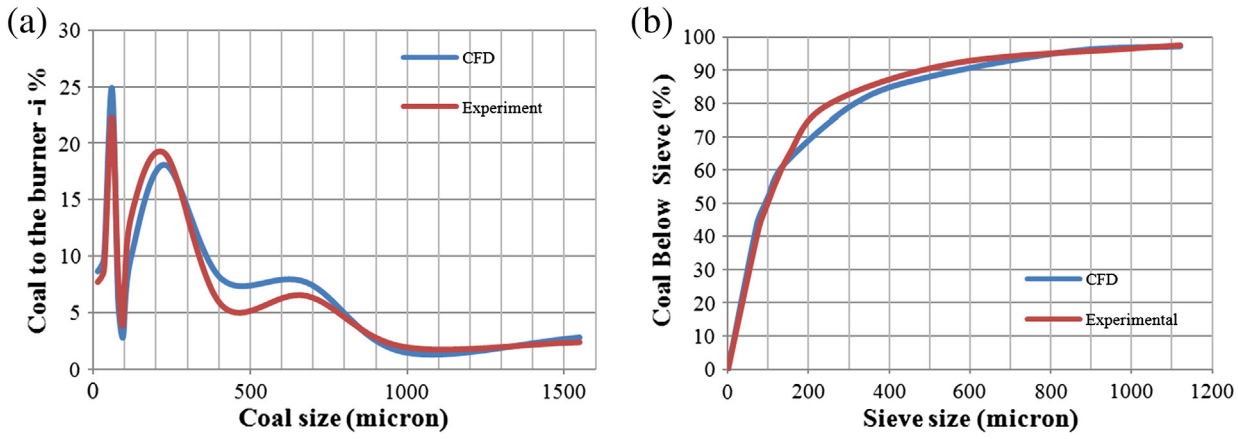

Fig. 12. (a) Rate of coal for different coal sizes and (b) cumulative coal rate under the sieve.

comparing designs, the total coal mass flow and the coal size distribution less than 90 and 1000 μm were accounted for. With these performance parameters, design D-20 yielded the best results with a coal mass flow rate of 11.7 kg/s, and coal size distributions of 54.8% and 97% for particles less than 90 and 1000 μm, respectively. From the analyses with different constructions, some additional results were obtained:

- Reducing the classifier inlet by using a plate increased the inlet gas velocity to the classifier, which resulted in smaller coal sizes that reached the curved portion of the classifier (compared to designs without an inlet plate). Therefore, a greater amount of small coal particles was directed to the regrind duct for further grinding, and a reduced amount of total coal mass flowed to the burners.
- Placing a plate at the curved portion (D-02) increased the coal mass to the regrind duct by decreasing the separation efficiency and total mass flow to the burners.
- Placing plates at the right hand side of the outlet increased the outlet total coal mass because some larger coal particles collided with these plates and were directed to the outlet by the gas stream.
- While the motion of some coal particles was dominated by the primary gas flow stream, some particles did not follow the stream because of their large mass. By using the plates to control the flow structure inside the classifier, the separation efficiency and total coal mass flow to the burners were increased.

Effect of design variants is summarized in Table 9 giving an insight to future studies about online classifier vane adjustment. It can be concluded that increasing the number of plates increases the mass flow rate to the burner. However, as in the case of D-02 and D-15 same number of plates can give different results, which means that not only the number but also location of plates is important. In addition, it can be inferred by comparing D-15, D-20, and D-21 that increasing the mass flow rate to the burner after some point coal fineness reduces.

Because the designs are modular, by including the design aspect of D-20 and deactivating the middle plate, design D-21 was chosen and applied at the PP mill classifier. Good agreement between the numerical and experimental results was obtained. A maximum difference of 2.5% for the individual coal size distributions and a cumulative maximum difference of 5% for the total coal size distributions under the sieve were observed (Fig. 12). These results indicate that the assumptions that were used in the numerical analysis were valid.

The assumption of decreasing the regrind outlet flow rate also appeared to be valid because no problems arose during tests about mill, and this effect was observed from the mill motor power rates. Tuning of the design was achieved by varying the adjustable plate angles. The plate angles inside the classifier were adjusted in this study by considering two performance parameters: the surface area of the coal and the fineness distribution at the outlet. In the tests, the operation of the mill at lower load resulted in a finer coal size distribution at the outlet.

Table 8
Results of sieve and coal particle surface area according to different plate positions.

Test no	Mill load (%)	Less than 90 μm (%)	Less than 1000 μm (%)	Coal surface area (m^2)	Reference surface change (m^2)
E95 01	95	47.43	96.61	10.82	0.0%
E95 02	95	36.88	95.60	8.95	−17.3%
E80 02	80	37.49	97.10	9.04	−16.5%
E95 03	95	38.94	95.51	9.26	−14.4%
E80 04	80	47.27	99.23	10.96	1.3%
E80 05	80	45.70	99.22	10.67	−1.4%
E95 06	95	46.36	99.20	10.73	−0.8%
E80 06	80	45.81	98.23	10.76	−0.6%

Table 9
Effects of design variants.

Design	Number of plates inside	Total coal mass flow to the burner	Total coal mass flow for regrinding	Distribution <90 μm
D-00	–	Base	Base	Base
D-02	1	Highly decreased	Highly increased	Highly increased
D-15	1	Slightly increased	Slightly decreased	Increased
D-20	2	Increased	Decreased	Increased
D-21	3	Highly increased	Highly decreased	Highly decreased

Acknowledgments

Soma Electricity Production A.Ş. provided support for the research (Project No: 5122107). The authors are very grateful for their technical assistance and support in developing experimental facilities and performing the experiments.

References

[1] J.G. Singer, Combustion Fossil Power, Combustion Engineering INC., Connecticut, 1991.
[2] J.B. Kitto, S.C. Stultz, Steam: Its Generation and Use, ed. 41 The Babcock & Wilcox Company, 2005.
[3] Storm Technologies, Quick Reference Guide, 2004.
[4] S.K. Storm, R.F. Storm, D.S. Storm, S. Tuzenew, A. McClellan, A case study of how vertical spindle pulverizer performance is related to overall plant performance, ASME Paper 87-JPGC-PWR-6, ASME International Electric Power Conference, 2006, (Atlanta, Georgia).
[5] H. Bilirgen, Balancing of pulverized coal flows to burners in boilers with pressurized vertical spindle mills, DOE Award Number DE-FC26-03NT41867, 2005.
[6] H.B. Vuthaluru, V.K. Pareek, R. Vuthaluru, Multiphase flow simulation of a simplified coal pulveriser, Fuel Processing Technology 86 (2005) 1195–1205.
[7] R. Johansson, M. Evertson, CFD simulation of a gravitational air classifier, Minerals Engineering 33 (2012) 20–26.
[8] K.V. Shah, R. Vuthaluru, H.B. Vuthaluru, CFD based investigations into optimization of coal pulveriser performance: effect of classifier vane settings, Fuel Processing Technology 90 (2009) 1135–1141.
[9] Q. Wang, M.C. Melaaen, S.R. De Silva, Investigation and simulation of a cross-flow air classifier, Powder Technology 120 (3) (2001) 273–280.
[10] L. Afolabi, A. Aroussi, N.M. Isa, Numerical modelling of the carrier gas phase in a laboratory-scale coal classifier model, Fuel Processing Technology 92 (3) (2011) 556–562.
[11] Qingsheng Lin, Craig Penterson, Coal pulverizer design upgrades to meet the demands of low NOx burners, Electric Power, March 30–April 1, 2004, Baltimore, MD, 2004.
[12] C. Bhasker, Numerical simulation of turbulent flow in complex geometries used in power plants, Advances in Engineering Software 33 (2002) 71–83.
[13] Fluent, Fluent 6.3 User's Guide, 2006.
[14] J.L. Ferrin, L. Saavedra, Distribution of the coal flow in the mill-duct system of the As Pontes Power Plant using CFD modelling, Fuel Processing Technology 106 (2013) 84–94.
[15] M. Sommerfeld, N. Huber, Experimental analysis and modelling of particle–wall collisions, International Journal of Multiphase Flow 25 (1999) 1457–1489.